AQA | A-LEVEL PHYSICS | 7408/3BC

Paper 3 Section B: Engineering physics

June 2024 exam series

QUESTION PAPER

Provided for free student revision by Smart Edge International Ltd.
Original material copyright AQA and its licensors. SmartEdge is not affiliated with or endorsed by AQA. For personal study only.
Not for resale or redistribution.

Please write clearly in block capitals.

Centre number | | | | | | Candidate number | | | | |

Surname _____

Forename(s) _____

Candidate signature _____
I declare this is my own work.

A-level
PHYSICS

Paper 3
Section B Engineering physics

Monday 17 June 2024 Morning

Time allowed: The total time for both sections of this paper is 2 hours. You are advised to spend approximately 50 minutes on this section.

Materials
For this paper you must have:
- a pencil and a ruler
- a scientific calculator
- a Data and Formulae Booklet
- a protractor.

Instructions
- Use black ink or black ball-point pen.
- Fill in the boxes at the top of this page.
- Answer **all** questions.
- You must answer the questions in the spaces provided. Do not write outside the box around each page or on blank pages.
- If you need extra space for your answer(s), use the lined pages at the end of this book. Write the question number against your answer(s).
- Do all rough work in this book. Cross through any work you do not want to be marked.
- Show all your working.

Information
- The marks for questions are shown in brackets.
- The maximum mark for this paper is 35.
- You are expected to use a scientific calculator where appropriate.
- A Data and Formulae Booklet is provided as a loose insert.

For Examiner's Use	
Question	Mark
1	
2	
3	
4	
TOTAL	

J U N 2 4 7 4 0 8 3 B C 0 1

IB/M/Jun24/E6

7408/3BC

Do not write outside the box

There are no questions printed on this page

DO NOT WRITE ON THIS PAGE
ANSWER IN THE SPACES PROVIDED

Do not write outside the box

Section B

Answer **all** questions in this section.

0 1 A heavy turntable is mounted on a fixed base. The turntable can rotate freely on a low-friction bearing.

0 1 . 1 **Figure 1** shows a propeller unit fixed to the centre of the turntable.
The propeller unit consists of a motor-driven propeller and a battery.
The propeller and the turntable have a common axis of rotation.

Figure 1

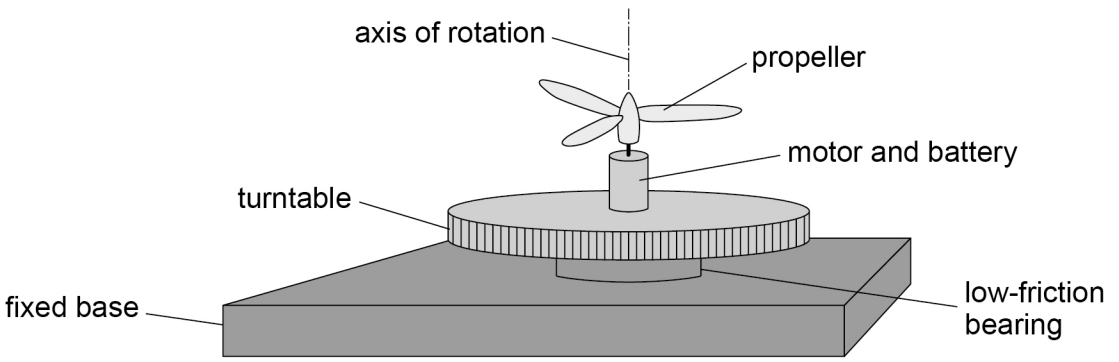

At first, the turntable and the propeller are at rest.
The propeller motor is switched on and the propeller quickly reaches a high final angular speed.
The propeller rotates clockwise when viewed from above.

Compare, with reference to angular momentum, the motions of the turntable and the propeller.

[3 marks]

Question 1 continues on the next page

Do not write outside the box

0 1 . 2 **Figure 2** shows an arrangement used to determine the moment of inertia of the turntable.

Figure 2

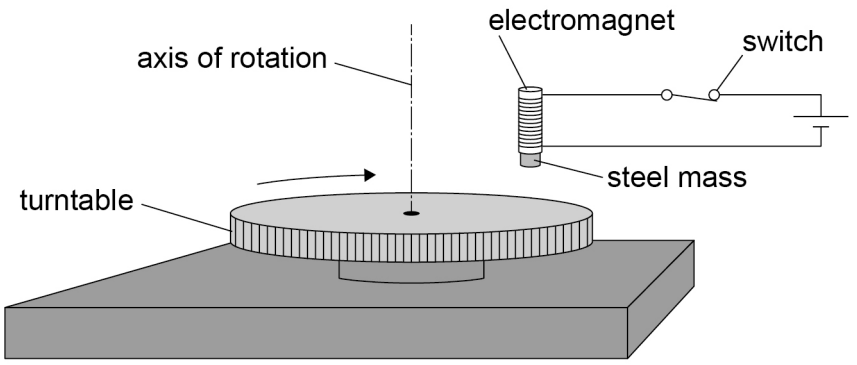

A small steel mass is held by an electromagnet above the top surface of the turntable.
The diameter of the turntable is about half a metre.
The turntable rotates freely at an initial angular speed ω_1.

The switch is opened so that the mass falls and sticks to the surface of the turntable.
This changes the angular speed of the turntable to ω_2.
The steel mass can be considered to be a point mass.

Describe how to determine the moment of inertia of the turntable using observations of ω_1 and ω_2.
In your answer you should:

- suggest how ω_1 and ω_2 are measured
- state any other measurements needed and name the equipment used to make them
- explain how the moment of inertia of the turntable is determined from the measurements.

[6 marks]

Do not write outside the box

9

Turn over ►

Do not write outside the box

There are no questions printed on this page

DO NOT WRITE ON THIS PAGE
ANSWER IN THE SPACES PROVIDED

Do not write outside the box

0 2 **Figure 3** shows an excavator.

Figure 3

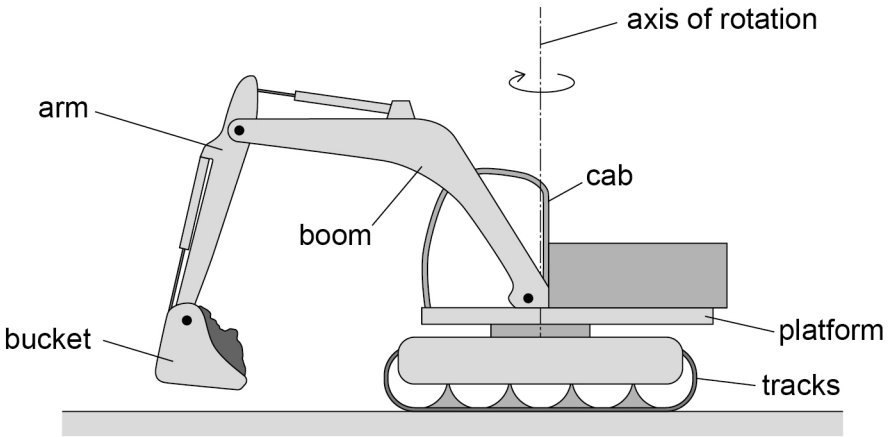

The bucket position can be changed by moving the boom and arm and by rotating the platform about the vertical axis of rotation.
For the purposes of this question, assume that the excavator tracks do not move.

Question 2 continues on the next page

Do not write outside the box

The bucket is moved to a new position by rotating the platform about the axis of rotation.
Figure 4 shows the variation in angular velocity ω with time t for the rotation of the platform about the vertical axis.

Figure 4

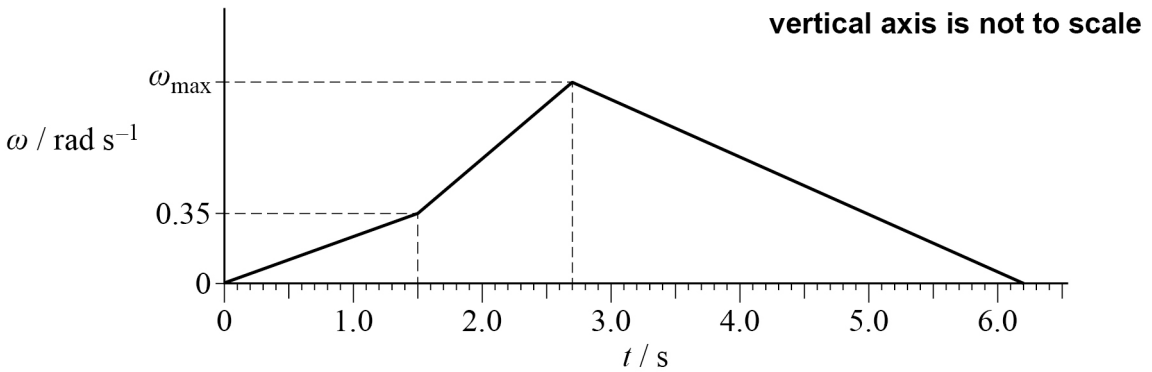

0 2 . 1 The total angular displacement of the platform is 2.52 rad during the movement of the bucket.

Show that ω_{max} is about 0.9 rad s^{-1}.

[3 marks]

Do not write outside the box

At the same time as the platform is rotating, the bucket is moved up and down, and away from and towards the cab.

The moment of inertia of the rotating parts of the excavator about the axis of rotation is I.
Figure 5 shows how I varies with t for the same time period as **Figure 4**.

Figure 5

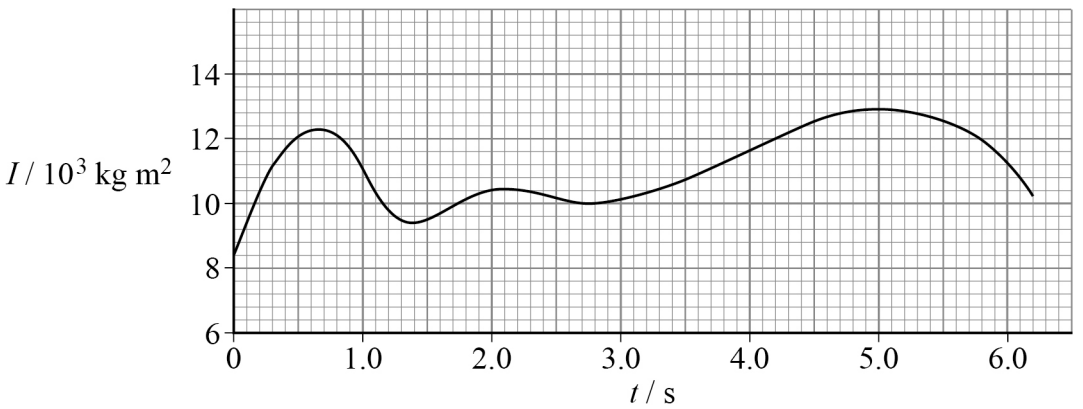

0 2 . 2 Torque must be applied to the platform to change its angular velocity and to overcome friction at the platform bearing.

Show that the torque applied to the platform is at a maximum at time $t = 2.1$ s.

[3 marks]

Question 2 continues on the next page

Do not write outside the box

0 2 . 3 Deduce whether the maximum power applied to the platform occurs at the same time of 2.1 s.

[2 marks]

8

Do not write outside the box

Turn over for the next question

DO NOT WRITE ON THIS PAGE
ANSWER IN THE SPACES PROVIDED

Turn over ►

Do not write outside the box

0 3 The Lenoir engine was the first successful internal combustion engine.

Figure 6 shows the basic form of the Lenoir engine. The piston rod drives a crankshaft which is not shown. The fuel is a mixture of gas and air.

Figure 6

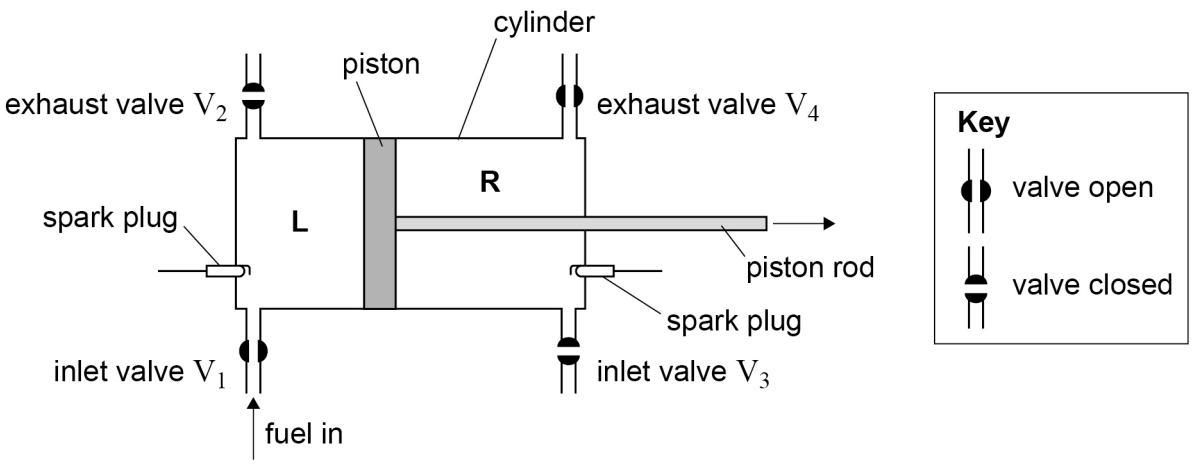

Figure 7 shows an indicator diagram for the space **L**, taken during a test on a Lenoir engine.

Figure 7

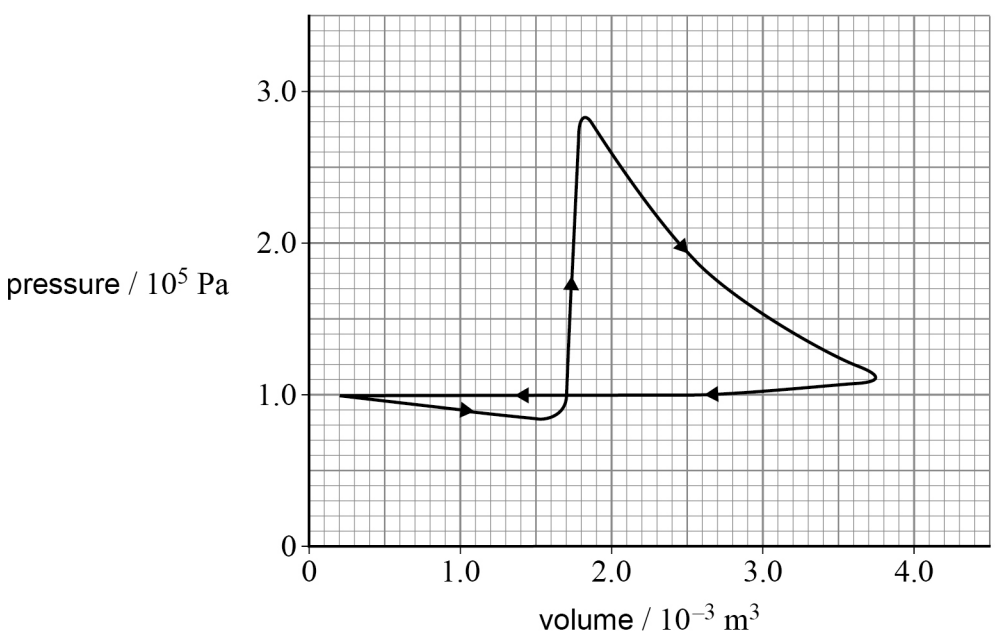

Do not write outside the box

In one cycle the following changes occur in **L**.

- **Induction**. The piston starts at the left-hand end of the cylinder. It moves to the right and fuel passes through the open inlet valve V_1 into **L**. **Figure 6** shows the piston during this induction process, with V_1 open.
- **Ignition**. When the piston is nearly halfway along the cylinder, V_1 is closed. A spark ignites the fuel causing a sudden rise in pressure.
- **Expansion**. The hot gases expand and the piston moves to the end of the stroke.
- **Exhaust**. The exhaust valve V_2 opens. The piston moves to the left. The exhaust gases are expelled at atmospheric pressure.

The same processes are repeated in space **R** one half of a revolution of the crankshaft later than in **L**. So when the piston is moving to the left, induction, ignition and expansion occur in **R** at the same time as the exhaust process occurs in **L**.

0 3 . 1 The indicator diagram is for a rotational speed of the crankshaft of 120 rev min^{-1}.

Determine, using **Figure 7**, the indicated power of the engine.
Assume that the indicator diagram for **R** is identical to the indicator diagram for **L**.

[5 marks]

indicated power = _____ W

Question 3 continues on the next page

Do not write outside the box

0 3 . 2 The following data are taken during the test on the engine:

fuel consumption = $6.44 \times 10^{-4}\ \mathrm{m^3\ s^{-1}}$
calorific value of fuel = $18.0 \times 10^{6}\ \mathrm{J\ m^{-3}}$
torque at crankshaft = $39.0\ \mathrm{N\ m}$
rotational speed = $120\ \mathrm{rev\ min^{-1}}$

Calculate the input power and the output (brake) power of the engine.

[2 marks]

input power = _____ W

output power = _____ W

0 3 . 3 The output power of a four-stroke petrol engine of a similar working volume to that of the Lenoir engine is about $150\ \mathrm{kW}$.

Suggest **two** reasons for the very low output power of the Lenoir engine compared with a four-stroke petrol engine.

[2 marks]

1 _____

_____

_____

_____

2 _____

_____

_____

_____

Do not write outside the box

0 3 . 4 Which statement is correct?

Tick (✓) **one** box.

[1 mark]

Thermal efficiency is a measure of how much of the indicated power is converted into output power. ☐

Overall efficiency is the product of mechanical efficiency and thermal efficiency. ☐

Mechanical efficiency is equal to friction power divided by indicated power. ☐

Input power is equal to indicated power plus friction power. ☐

10

Turn over for the next question

Do not write outside the box

0 4 . 1 The first law of thermodynamics can be expressed by the equation $Q = \Delta U + W$.

State the meaning of each term in this equation.

[2 marks]

Q _____

_____

ΔU _____

_____

W _____

_____

0 4 . 2 A system consists of a perfectly insulated room containing only an empty refrigerator. The refrigerator is connected to the mains electricity and the refrigerator door is open.

Deduce, by applying the first law of thermodynamics, whether the internal energy of the room increases, decreases or stays the same.

[3 marks]

_____

_____

_____

_____

_____

_____

_____

_____

_____

Do not write outside the box

One definition of an ideal heat engine is:

'a device which provides the maximum possible output of work from a given input of energy by heat transfer.'

Figure 8 shows a heat engine that appears to agree with this definition. The engine takes in energy from a high-temperature source and work is done by the engine.

Figure 8

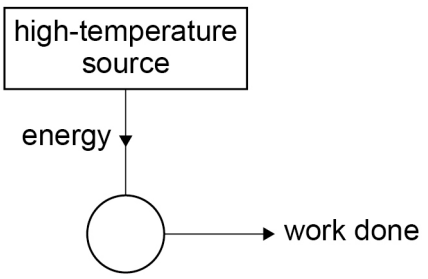

0 4 . 3 Complete **Figure 8** so that the engine obeys the second law of thermodynamics.

[1 mark]

0 4 . 4 Explain why the maximum theoretical efficiency of an ideal heat engine must be less than 100%.

[2 marks]

_____

_____

_____

_____

_____

_____

8

END OF QUESTIONS

Do not write outside the box

There are no questions printed on this page

DO NOT WRITE ON THIS PAGE
ANSWER IN THE SPACES PROVIDED

Do not write outside the box

Question number	**Additional page, if required.** **Write the question numbers in the left-hand margin.**

Do not write outside the box

Question number	**Additional page, if required.** **Write the question numbers in the left-hand margin.**

Copyright information

For confidentiality purposes, all acknowledgements of third-party copyright material are published in a separate booklet. This booklet is published after each live examination series and is available for free download from www.aqa.org.uk

Permission to reproduce all copyright material has been applied for. In some cases, efforts to contact copyright-holders may have been unsuccessful and AQA will be happy to rectify any omissions of acknowledgements. If you have any queries please contact the Copyright Team.

Copyright © 2024 AQA and its licensors. All rights reserved.