AQA | A-LEVEL PHYSICS | 7408/3BE

Paper 3 Section B: Electronics

June 2024 exam series

MARK SCHEME

Provided for free student revision by Smart Edge International Ltd.
Original material copyright AQA and its licensors. SmartEdge is not affiliated with or endorsed by AQA. For personal study only.
Not for resale or redistribution.

A-level
PHYSICS
7408/3BE

Paper 3 Section B Electronics

Mark scheme

June 2024

Version: 1.0 Final

2 4 6 A 7 4 0 8 / 3 B E / M S

Mark schemes are prepared by the Lead Assessment Writer and considered, together with the relevant questions, by a panel of subject teachers. This mark scheme includes any amendments made at the standardisation events which all associates participate in and is the scheme which was used by them in this examination. The standardisation process ensures that the mark scheme covers the students' responses to questions and that every associate understands and applies it in the same correct way. As preparation for standardisation each associate analyses a number of students' scripts. Alternative answers not already covered by the mark scheme are discussed and legislated for. If, after the standardisation process, associates encounter unusual answers which have not been raised they are required to refer these to the Lead Examiner.

It must be stressed that a mark scheme is a working document, in many cases further developed and expanded on the basis of students' reactions to a particular paper. Assumptions about future mark schemes on the basis of one year's document should be avoided; whilst the guiding principles of assessment remain constant, details will change, depending on the content of a particular examination paper.

No student should be disadvantaged on the basis of their gender identity and/or how they refer to the gender identity of others in their exam responses.

A consistent use of 'they/them' as a singular and pronouns beyond 'she/her' or 'he/him' will be credited in exam responses in line with existing mark scheme criteria.

Further copies of this mark scheme are available from aqa.org.uk

Copyright information

AQA retains the copyright on all its publications. However, registered schools/colleges for AQA are permitted to copy material from this booklet for their own internal use, with the following important exception: AQA cannot give permission to schools/colleges to photocopy any material that is acknowledged to a third party even for internal use within the centre.

Copyright © 2024 AQA and its licensors. All rights reserved.

Physics - Mark scheme instructions to examiners

1. General

The mark scheme for each question shows:

- the marks available for each part of the question
- the total marks available for the question
- the typical answer or answers which are expected
- extra information to help the Examiner make his or her judgement and help to delineate what is acceptable or not worthy of credit or, in discursive answers, to give an overview of the area in which a mark or marks may be awarded.

The extra information is aligned to the appropriate answer in the left-hand part of the mark scheme and should only be applied to that item in the mark scheme.

At the beginning of a part of a question a reminder may be given, for example: where consequential marking needs to be considered in a calculation; or the answer may be on the diagram or at a different place on the script.

In general the right-hand side of the mark scheme is there to provide those extra details which confuse the main part of the mark scheme yet may be helpful in ensuring that marking is straightforward and consistent.

2. Emboldening

2.1 In a list of acceptable answers where more than one mark is available 'any **two** from' is used, with the number of marks emboldened. Each of the following bullet points is a potential mark.
2.2 A bold **and** is used to indicate that both parts of the answer are required to award the mark.
2.3 Alternative answers acceptable for a mark are indicated by the use of **or**. Different terms in the mark scheme are shown by a / ; eg allow smooth / free movement.

3. Marking points

3.1 Marking of lists

This applies to questions requiring a set number of responses, but for which candidates have provided extra responses. The general principle to be followed in such a situation is that 'right + wrong = wrong'.

Each error / contradiction negates each correct response. So, if the number of errors / contradictions equals or exceeds the number of marks available for the question, no marks can be awarded.

However, responses considered to be neutral (often prefaced by 'Ignore' in the mark scheme) are not penalised.

3.2 Marking procedure for calculations

Full marks can usually be given for a correct numerical answer without working shown unless the question states 'Show your working'. However, if a correct numerical answer can be evaluated from incorrect physics then working will be required. The mark scheme will indicate both this and the credit (if any) that can be allowed for the incorrect approach.

smartedgestudy.com Original material: AQA | SmartEdge! free revision library | Page 3 of 17

However, if the answer is incorrect, mark(s) can usually be gained by correct substitution / working and this is shown in the 'extra information' column or by each stage of a longer calculation.

A calculation must be followed through to answer in decimal form. An answer in surd form is never acceptable for the final (evaluation) mark in a calculation and will therefore generally be denied one mark.

3.3 Interpretation of 'it'

Answers using the word 'it' should be given credit only if it is clear that the 'it' refers to the correct subject.

3.4 Errors carried forward, consequential marking and arithmetic errors

Allowances for errors carried forward are likely to be restricted to calculation questions and should be shown by the abbreviation ECF or *conseq* in the marking scheme.

An arithmetic error should be penalised for one mark only unless otherwise amplified in the marking scheme. Arithmetic errors may arise from a slip in a calculation or from an incorrect transfer of a numerical value from data given in a question.

3.5 Phonetic spelling

The phonetic spelling of correct scientific terminology should be credited (eg fizix) **unless** there is a possible confusion (eg defraction/refraction) with another technical term.

3.6 Brackets

(…..) are used to indicate information which is not essential for the mark to be awarded but is included to help the examiner identify the sense of the answer required.

3.7 Ignore / Insufficient / Do <u>not</u> allow

'Ignore' or 'insufficient' is used when the information given is irrelevant to the question or not enough to gain the marking point. Any further correct amplification could gain the marking point.

'Do **not** allow' means that this is a wrong answer which, even if the correct answer is given, will still mean that the mark is not awarded.

3.8 Significant figure penalties

Answers to questions in the practical sections (7407/2 – Section A and 7408/3A) should display an appropriate number of significant figures. For non-practical sections, an A-level paper may contain up to 2 marks (1 mark for AS) that are contingent on the candidate quoting the **final** answer in a calculation to a specified number of significant figures (sf). This will generally be assessed to be the number of sf of the datum with the least number of sf from which the answer is determined. The mark scheme will give the range of sf that are acceptable but this will normally be the sf of the datum (or this sf -1).

An answer in surd form cannot gain the sf mark. An incorrect calculation **following some working** can gain the sf mark. For a question beginning with the command word 'Show that…', the answer should be quoted to **one more** sf than the sf quoted in the question eg 'Show that X is equal to about 2.1 cm' –

answer should be quoted to 3 sf. An answer to 1 sf will not normally be acceptable, unless the answer is an integer eg a number of objects. In non-practical sections, the need for a consideration will be indicated in the question by the use of 'Give your answer to an appropriate number of significant figures'.

3.9 Unit penalties

An A-level paper may contain up to 2 marks (1 mark for AS) that are contingent on the candidate quoting the correct unit for the answer to a calculation. The need for a unit to be quoted will be indicated in the question by the use of 'State an appropriate SI unit for your answer'. Unit answers will be expected to appear in the most commonly agreed form for the calculation concerned; strings of fundamental (base) units would not. For example, 1 tesla and 1 Wb m^{-2} would both be acceptable units for magnetic flux density but 1 kg m^2 s^{-2} A^{-1} would not.

3.10 Level of response marking instructions

Level of response mark schemes are broken down into three levels, each of which has a descriptor. The descriptor for the level shows the average performance for the level. There are two marks in each level.

Before you apply the mark scheme to a student's answer read through the answer and annotate it (as instructed) to show the qualities that are being looked for. You can then apply the mark scheme.

Determining a level

Start at the lowest level of the mark scheme and use it as a ladder to see whether the answer meets the descriptor for that level. The descriptor for the level indicates the different qualities that might be seen in the student's answer for that level. If it meets the lowest level then go to the next one and decide if it meets this level, and so on, until you have a match between the level descriptor and the answer. With practice and familiarity you will find that for better answers you will be able to quickly skip through the lower levels of the mark scheme.

When assigning a level you should look at the overall quality of the answer and not look to pick holes in small and specific parts of the answer where the student has not performed quite as well as the rest. If the answer covers different aspects of different levels of the mark scheme you should use a best fit approach for defining the level and then use the variability of the response to help decide the mark within the level. ie if the response is predominantly level 2 with a small amount of level 3 material it would be placed in level 2.

The exemplar materials used during standardisation will help you to determine the appropriate level. There will be an answer in the standardising materials which will correspond with each level of the mark scheme. This answer will have been awarded a mark by the Lead Examiner. You can compare the student's answer with the example to determine if it is the same standard, better or worse than the example. You can then use this to allocate a mark for the answer based on the Lead Examiner's mark on the example.

You may well need to read back through the answer as you apply the mark scheme to clarify points and assure yourself that the level and the mark are appropriate.

Indicative content in the mark scheme is provided as a guide for examiners. It is not intended to be exhaustive and you must credit other valid points. Students do not have to cover all of the points mentioned in the indicative content to reach the highest level of the mark scheme.

An answer which contains nothing of relevance to the question must be awarded no marks.

smartedgestudy.com Original material: AQA | SmartEdge! free revision library | Page 5 of 17

Question	Answers	Additional comments/Guidelines	Mark	AO
01.1	When B = logic 0, (point D is logic 1.) (Result: closes the lower AND gate and opens the upper AND gate.) Only the 1024 Hz signal is allowed to (pass through to the OR gate) output Q. ✓ When B = logic 1,(point D is logic 0). (Result: closes the upper AND gate and opens the lower AND gate.) Only the 512 Hz signal is allowed to (pass through to the OR gate) output Q. ✓	1st mark: • explanation for either logic 1 or logic 0 input • reference as to which frequency passes through OR gate. 2nd mark: reference to other half of the cycle and output frequency. 1 Max if there is no reference to the action of at least 1 gate.	2	AO2

Question	Answers	Additional comments/Guidelines	Mark	AO
01.2	**Q** = $(A \cdot \overline{B})$ + (B . C) ✓ ✓	1st mark for: contents of either bracket 2nd mark for: contents of other bracket and the '+'	2	AO2

Question	Answers	Additional comments/Guidelines	Mark	AO
01.3	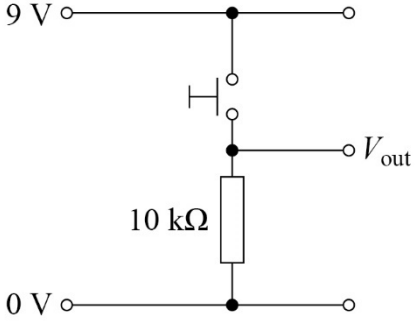 ✓	Mark awarded if all the following are present: • resistor and push-to-make switch are in correct position • output point in correct position and labelled.	1	AO3

Question	Answers	Additional comments/Guidelines	Mark	AO
01.4	**Q_9** ✓	$2^{(n+1)} = 1024$ Condone n = 9	1	AO2

Question	Answers	Additional comments/Guidelines	Mark	AO
01.5	Option 1 requires a total of 6 ICs whereas Option 2 requires a total of 3 ICs ✓ Advantage: One from: ✓ • smaller circuit to fit toys • less power consumed / extended battery life • less complex circuits / lower production costs	1st mark: identifies the main advantage (must be numerical) 2nd mark: gives one advantage from the list /or other valid explanation Allow one mark for answers that only consider number of **logic gates** in the two systems leading to the correct conclusion.	2	AO3
Total			**8**	

Question	Answers	Additional comments/Guidelines	Mark	AO
02.1	1 from ✓ • $160 \times 7 = 1120$ bits • 140 bytes seen • their number of bits ÷ (64×10^3) • their number of bytes ÷ (8×10^3) $= 17.5 \times 10^{-3}$ s ✓	1st mark for correct bits or bytes conversion in message or time calculation 2nd mark for answer Allow 2 sf answer.	2	AO2

Question	Answers	Additional comments/Guidelines	Mark	AO
02.2	Internal noise: thermal agitation of electrons / charge carriers in a conductor OR External noise: idea of electromagnetic interference (EMI) eg cross-talk / power switching etc. ✓	Accept one example for the mark	1	AO1

Question	Answers	Additional comments/Guidelines	Mark	AO
02.3	Effect of electrical noise on the signal: • degrades the quality of the signal ✓ Effect of electrical noise on the communication system: • reduces the efficiency of the transmission e.g. increased latency of the system ✓		2	AO1

Question	Answers	Additional comments/Guidelines	Mark	AO
02.4	**Figure 6** 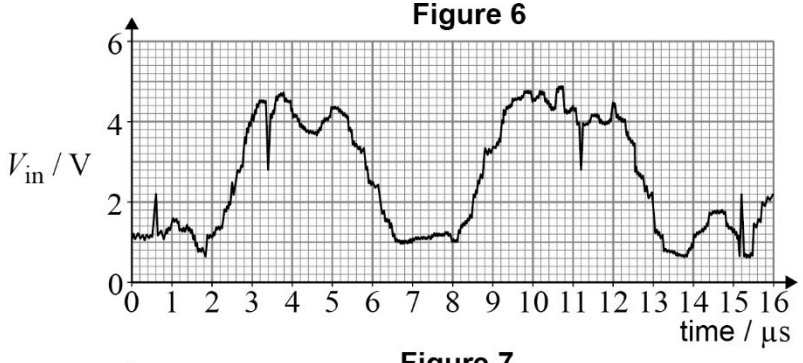 **Figure 7** 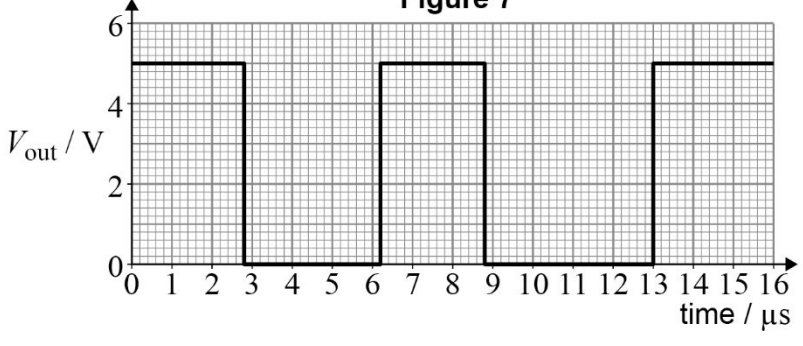 ✓✓	1st mark – 0 to 5 V sq wave with 3 marks and two spaces 2nd mark – any three correct transitions.	2	AO2 AO3
Total			**7**	

Question	Answers	Additional comments/Guidelines	Mark	AO
03.1	L ✓		1	AO1

Question	Answers	Additional comments/Guidelines	Mark	AO
03.2	Evidence of 0.707 OR 0.71 OR 0.7 used ✓ ($V_{out} = 3.6$ mV) use of Q = their f_0 ÷ their f_B ✓ $Q = 774 \div 10 = 77.4$ ✓ Accept range ($Q = 70 – 86$)	Expect to see $f_0 = (779 – 769)$ kHz; $f_B = 10$ kHz (± 1 kHz) Alternative for 2 marks max if ~50% point is used ($V_{out} \approx 2.6$ mV) leading to $f_B = 12$ kHz (± 1 kHz) ✓ $Q = 65$ ✓ Accept that rounds in range ($Q = 60 – 70$)	3	AO3

Question	Answers	Additional comments/Guidelines	Mark	AO
03.3	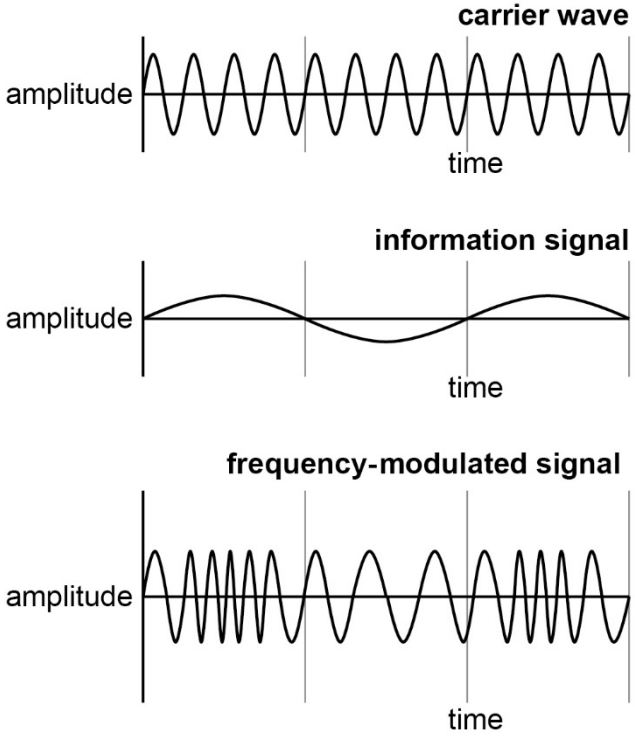 ✓✓	1st mark – constant amplitude 2nd mark – correct frequency variation	2	AO2

Question	Answers	Additional comments/Guidelines	Mark	AO
03.4	$f_m = 18$ ✓ (kHz)	Expect to see bandwidth $= 2(\Delta f + f_m)$	1	AO1
Total			**7**	

Question	Answers	Additional comments/Guidelines	Mark	AO
04.1	$V_R = 5$ V chosen and idea that the photocurrent increases linearly/ most throughout the light intensity change ✓ $(2 \times 10^{-5} - 5 \times 10^{-6})$ A OR $(20 \times 10^{-6} - 5 \times 10^{-6})$ A Change in photocurrent = 15×10^{-6} A ✓	MP1 for reason of choice MP2 for answer If no other mark awarded, allow **1 MAX** for identification of $V_R = 1$V and answer in range 5 to 6×10^{-6} A.	2	AO3 AO3

Question	Answers	Additional comments/Guidelines	Mark	AO
04.2	Atomic particles need to interact with scintillation material to produce light ✓ Photodiode is used in photoconductive mode / with reverse bias ✓		2	AO1 AO2

Question	Answers	Additional comments/Guidelines	Mark	AO
04.3	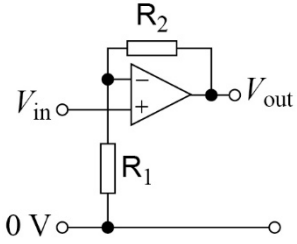 **OR** 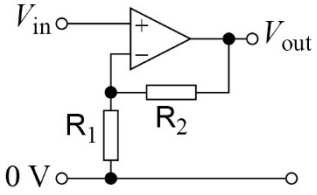 ✓✓✓	1st mark for correct configuration 2nd mark for only two resistors seen, in the ratio $9 : 1$ for R_2:R_1 3rd mark: • output labelled • resistor values within suggested range	3	AO1 AO3 AO3
Total			**7**	

<table>
<tr><th>Question</th><th>Answers</th><th>Additional comments/Guidelines</th><th>Mark</th><th>AO</th></tr>
<tr><td>05</td><td>The mark scheme gives some guidance as to what statements are expected to be seen in a 1 or 2-mark (L1), 3 or 4-mark (L2) and 5 or 6-mark (L3) answer. Guidance provided in section 3.10 of the ‘Mark Scheme Instructions’ document should be used to assist in marking this question.
<table>
<tr><th>Mark</th><th>Criteria</th></tr>
<tr><td>6</td><td>All three areas covered with at least two aspects covered in some detail.
6 marks can be awarded even if there is an error and/or parts of one aspect missing.</td></tr>
<tr><td>5</td><td>A fair attempt to analyse all three areas. If there are several errors or missing parts, then 5 marks should be awarded.</td></tr>
<tr><td>4</td><td>Two areas successfully discussed, or one discussed and two others covered partially. Whilst there will be gaps, there should only be an occasional error.</td></tr>
<tr><td>3</td><td>One area discussed and one discussed partially, or all three covered partially. There are likely to be several errors and omissions in the discussion.</td></tr>
<tr><td>2</td><td>Only one area discussed or makes a partial attempt at two areas.</td></tr>
<tr><td>1</td><td>None of the three areas covered without significant error.</td></tr>
<tr><td>0</td><td>No relevant analysis.</td></tr>
</table></td><td>The following statements are likely to be present.

Analogue to Digital conversion
Sample rate
• Appreciation of speech being at lower end of audio spectrum (eg 3-4 kHz bandwidth)
• Minimum is $2 \times$ highest frequency
• If too low, then aliasing can occur
• If too high, then forces redundant data to be generated
Resolution
• Determined by number of bits (n) used to code each sample
• Number of levels available is 2^n
• If too low – leads to poor quality signal retrieval
• If too high – may exceed data rate capability of system
Transmission technique
• Name the technique 'Time Division Multiplexing'
• Data from each source transmitted in successive time slots using synchronized switches
• Time slots are of equal length
• Time slots present to each source in a cyclical way giving availability to each source at regular intervals
• Efficient / low-cost solution for heavy use transmission channel</td><td>6</td><td>AO1</td></tr>
<tr><td>Total</td><td></td><td></td><td>6</td><td></td></tr>
</table>