OCR | A-LEVEL PHYSICS | H556/02

Exploring physics

June 2024 exam series

QUESTION PAPER

Provided for free student revision by Smart Edge International Ltd.
Original material copyright OCR and its licensors. SmartEdge is not affiliated with or endorsed by OCR. For personal study only.
Not for resale or redistribution.

Oxford Cambridge and RSA

Thursday 6 June 2024 – Morning

A Level Physics A

H556/02 Exploring physics

Time allowed: 2 hours 15 minutes

You must have:
- the Data, Formulae and Relationships booklet

You can use:
- a scientific or graphical calculator
- a ruler (cm/mm)

Please write clearly in black ink. **Do not write in the barcodes.**

Centre number | | | | | | Candidate number | | | | |

First name(s) _____

Last name _____

INSTRUCTIONS
- Use black ink. You can use an HB pencil, but only for graphs and diagrams.
- Write your answer to each question in the space provided. If you need extra space use the lined pages at the end of this booklet. The question numbers must be clearly shown.
- Answer **all** the questions.
- Where appropriate, your answer should be supported with working. Marks might be given for using a correct method, even if your answer is wrong.

INFORMATION
- The total mark for this paper is **100**.
- The marks for each question are shown in brackets **[ ]**.
- Quality of extended response will be assessed in questions marked with an asterisk (*).
- This document has **32** pages.

ADVICE
- Read each question carefully before you start your answer.

© OCR 2024 [601/4743/X]
DC (CJ/SG) 343112/7
OCR is an exempt Charity

Turn over

Section A

You should spend a **maximum** of **30 minutes** on this section.

Write your answer to each question in the box provided.

1 What are the base units of a kilowatt-hour?

A J

B $kg\,m^2\,s^{-1}$

C $kg\,m^2\,s^{-2}$

D W s

Your answer ☐ **[1]**

2 A neutrino is a fundamental particle.

Which row of the table correctly describes a neutrino?

	Classification	**Force felt**
A	hadron	strong nuclear
B	hadron	weak nuclear
C	lepton	strong nuclear
D	lepton	weak nuclear

Your answer ☐ **[1]**

3 Which one of these non-invasive medical scans does **not** expose the patient to ionising radiation?

A CAT

B PET

C Ultrasound

D X-ray

Your answer ☐ **[1]**

© OCR 2024

4 Three capacitors are arranged in a circuit.

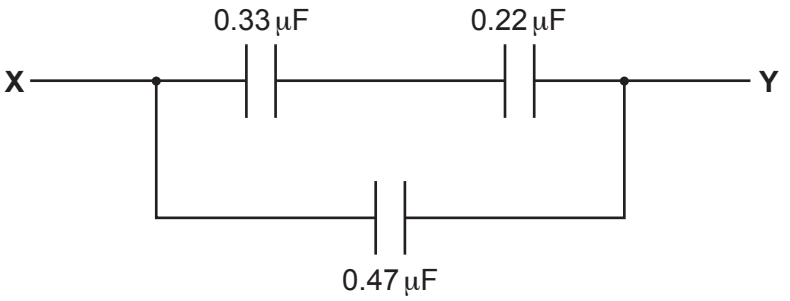

The capacitance of each capacitor is shown.

What is the total capacitance between **X** and **Y**?

A 0.25 μF

B 0.60 μF

C 1.02 μF

D 8.0 μF

Your answer ☐ **[1]**

5 The image shows a micrometer that is being used to measure the diameter of a wire.

The micrometer has a zero error of +0.07 mm. The measured value of the diameter from the micrometer scale is 2.88 mm.

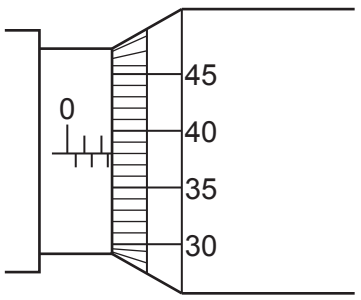

What is the correct area of cross-section of the wire?

A $2.21 \times 10^{-6}\,m^2$

B $6.20 \times 10^{-6}\,m^2$

C $6.51 \times 10^{-6}\,m^2$

D $6.84 \times 10^{-6}\,m^2$

Your answer ☐ **[1]**

© OCR 2024

6 The image shows a display of an oscilloscope which is measuring an alternating voltage. The time base is set at 0.1 s / division. The voltage scale (y-sensitivity) is set at 0.5 V / division.

Which row of the table shows the correct amplitude and correct frequency?

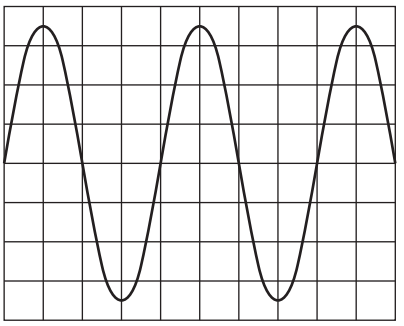

	amplitude / V	frequency / Hz
A	1.75	0.4
B	1.75	2.5
C	3.50	0.4
D	3.50	2.5

Your answer ☐ **[1]**

7 This question is about the rate of decay of a radioactive source.

Which of the following statements is/are true?

The rate of decay is

1 dependent on the decay constant.
2 independent of the mass of the source.
3 dependent on time.

A 1 only

B 1 and 3

C 2 only

D 2 and 3

Your answer ☐ **[1]**

© OCR 2024

8 A student is using a spreadsheet to model the decay of charge on a capacitor.

They are using the equation $\frac{\Delta Q}{\Delta t} = -\frac{Q}{2.5}$.

The student chooses a time interval of 0.5 s. At time t = 0.0 s the charge on the capacitor is 600 μC.

Part of the modelling spreadsheet is shown below.

t **/ s**	**Charge *Q* left on capacitor after time *t* / μC**	**Charge Δ*Q* decaying in the next 0.5 s / μC**
0.0	600	120
0.5	480	
1.0		
1.5		
2.0		

What is the charge on the capacitor at t = 1.5 s?

A 130 μC

B 240 μC

C 246 μC

D 307 μC

Your answer ☐ **[1]**

© OCR 2024

9 The diagram shows a string stretched between two posts.

The string is plucked and a stationary wave is set up.

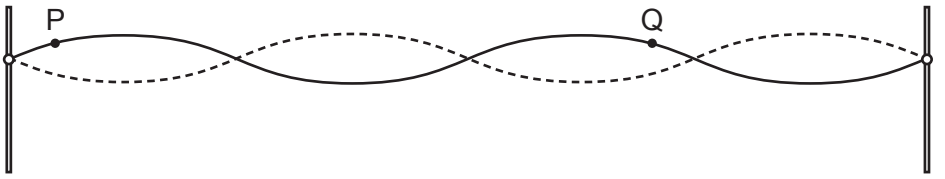

What is the phase difference between P and Q?

A 0 rad

B $\frac{\pi}{4}$ rad

C $\frac{\pi}{2}$ rad

D π rad

Your answer ☐ **[1]**

10 A student uses the circuit below to determine the electromotive force (e.m.f.) and internal resistance of a battery.

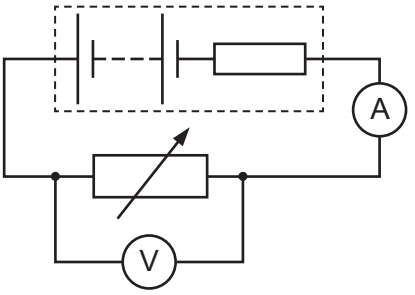

They measure the current and potential difference (p.d.) across the variable resistor for different resistor values.

A graph is drawn with p.d. on the *y*-axis and current on the *x*-axis.

Which row is correct for calculating the e.m.f. and the internal resistance of the battery?

	e.m.f	**internal resistance**
A	magnitude of gradient	intercept on *y*-axis
B	magnitude of $\frac{1}{\text{gradient}}$	intercept on *y*-axis
C	intercept *y*-axis	magnitude of $\frac{1}{\text{gradient}}$
D	intercept *y*-axis	magnitude of gradient

Your answer ☐ **[1]**

© OCR 2024

11 At the Earth's equator the magnetic flux density B is approximately 25 μT.

What is the magnitude of the force on an electron with velocity $v = 100\,\text{km}\,\text{s}^{-1}$ as it is moving perpendicular to the Earth's magnetic field at the equator?

A 4.0×10^{-25} N

B 4.0×10^{-22} N

C 4.0×10^{-19} N

D 4.0×10^{-16} N

Your answer ☐ **[1]**

12 What is the radius of a carbon nucleus that has 6 protons and 7 neutrons?

Assume that the average radius of a nucleon r_0 is 1.2 fm.

A 2.2 fm

B 2.3 fm

C 2.8 fm

D 1.6 fm

Your answer ☐ **[1]**

13 A sub-atomic particle has a positive charge.

Which type of particle is it?

A anti-proton

B down quark

C neutrino

D positron

Your answer ☐ **[1]**

© OCR 2024

14 A 1.0 kΩ resistor is connected in series to a battery made of three 1.2 V cells connected as shown. The cells have negligible internal resistance.

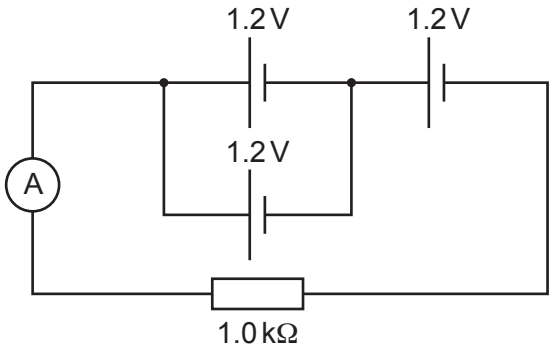

What is the reading on the ammeter?

A 1.2 mA

B 1.8 mA

C 2.4 mA

D 3.6 mA

Your answer ☐ **[1]**

15 Which sequence shows the energies below in **increasing** order of magnitude?

1 The change in kinetic energy of an electron accelerated through a potential difference of 1 V.
2 The kinetic energy of a proton with a velocity of 1000 m s^{-1}.
3 The energy of an X-ray photon with a frequency of 3×10^{17} Hz.

A 1 2 3

B 3 1 2

C 2 1 3

D 1 3 2

Your answer ☐ **[1]**

© OCR 2024

BLANK PAGE

PLEASE DO NOT WRITE ON THIS PAGE

© OCR 2024

Section B

16 Thermistors are circuit components whose resistance varies with temperature.

There are two major types; negative temperature coefficient (NTC) thermistors, whose resistance decreases with increasing temperature and positive temperature coefficient (PTC) thermistors, whose resistance increases with increasing temperature.

A student is investigating how the resistance of a thermistor varies with temperature by measuring current and voltage. The thermistor is placed in a water bath and the temperature of the water measured using a thermometer.

The diagram below shows how the student set up the experiment (water bath not shown). The circuit has been set up **incorrectly**.

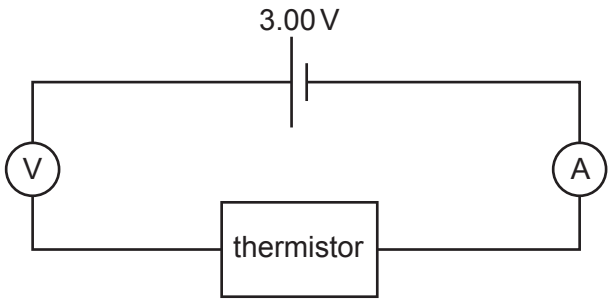

(a) Describe how the student should change the circuit.

.....

..... **[1]**

© OCR 2024

(b) The circuit was corrected and then used to collect data.

The table shows data collected from the investigation.

Temperature / °C	Current / mA	Voltage / V
30	0.75	3.00
40	1.10	3.00
50	1.51	3.00
60	2.10	3.00
70	2.80	3.00
80	3.66	3.00
90	4.76	3.00

(i) The axes below show a plot of current against temperature. The first four points from the table have been plotted. Plot the remaining points.

[1]

(ii) Draw a suitable line of best fit through the data points. **[1]**

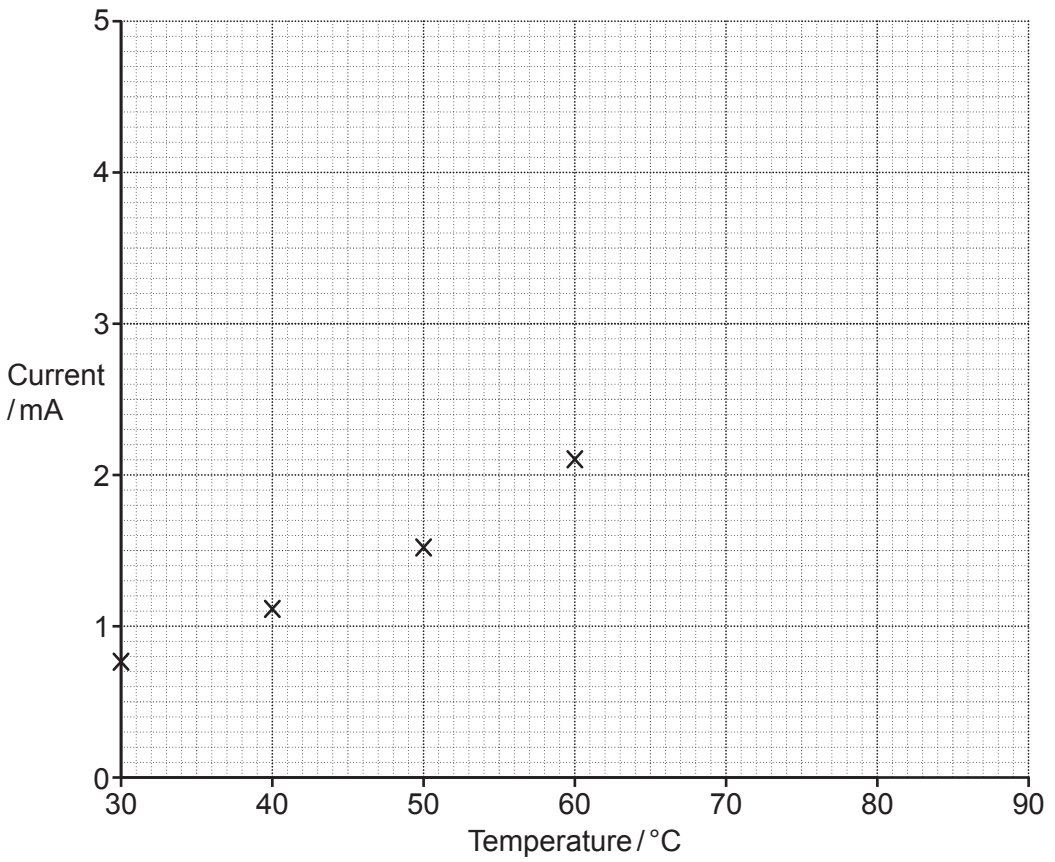

© OCR 2024

(c) Describe, using the graph and calculations using data from the table, how the resistance of the thermistor varies for increasing temperature.
Hence determine whether the thermistor the student used was an NTC or a PTC thermistor.

.....

.....

.....

.....

.....

.....

..... **[3]**

(d) The thermistor is used in a temperature-sensing circuit for a heating system to warm milk for a baby.

The student considers two possible designs for the circuit which are shown below.

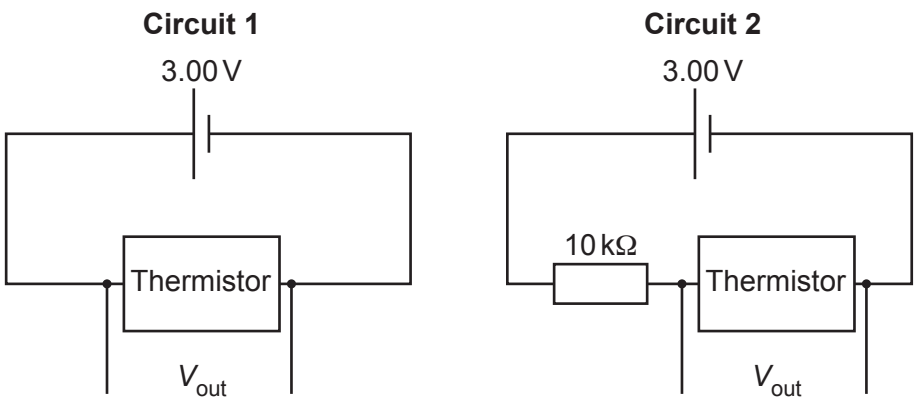

In each circuit, the voltage V_{out} across the thermistor is connected to the heating system for warming the milk.

Discuss which circuit may be suitable for the heating system by considering the response of the circuit to changes in temperature.

.....

.....

.....

.....

.....

.....

.....

© OCR 2024

.....

.....

.....

.....

.....

.....

..... **[4]**

© OCR 2024

17 The diagram shows two identical loudspeakers X and Y connected to a signal generator. The loudspeakers emit sound waves of the same amplitude and frequency which are in phase.

A microphone M is moved along a line from P_1 to P_3 and the signal recorded on an oscilloscope.

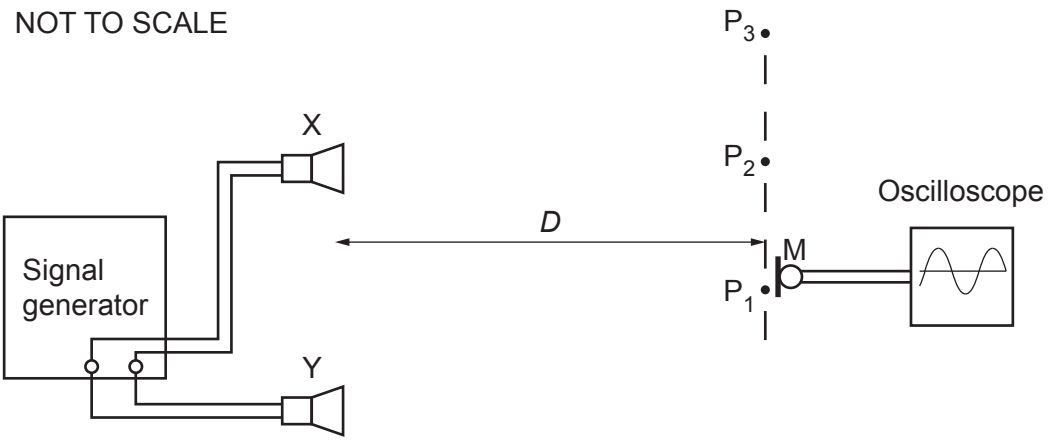

As the microphone is moved along the line P_1 to P_3 the oscilloscope shows maximum signal at P_1, zero signal at P_2 and the next maximum signal at P_3.

(a) Explain these observations.

.....

.....

.....

..... **[2]**

(b) The distance between the centres of X and Y is 70.0 cm, the distance *D* (as shown in the diagram) is 4.00 m and the distance from P_1 to P_2 is 1.25 m.

Use the two source interference formula to calculate the frequency of the sound waves. (Speed of sound = $340\,m\,s^{-1}$)

frequency = ... Hz **[3]**

© OCR 2024

(c) Loudspeaker Y is now replaced with a loudspeaker that produces sound waves of twice the original amplitude.

Describe how the signal observed on the oscilloscope varies as the microphone is moved along the line P_1 to P_3.

.....

.....

.....

..... **[2]**

(d)
(i) Explain what is meant by the term *intensity*.

.....

..... **[1]**

(ii) Calculate the factor by which the intensity of the sound waves at P_1 in **(c)** is larger than the intensity of the original sound waves at P_1.

factor = ... **[3]**

© OCR 2024

18*

(a) Describe how an experiment can be conducted to determine how the output current of a step-up transformer depends on the number of turns on the secondary coil.

Explain how the data collected can be analysed to establish the relationship between the output current and the number of turns on the secondary coil.

You are provided with wire and a suitable core on which to wind the wire, as well as any other normal laboratory equipment.

Use the space below to draw a labelled circuit diagram. **[6]**

.....

.....

.....

.....

.....

.....

.....

.....

.....

.....

.....

.....

.....

© OCR 2024

Additional space if required

.....

.....

.....

.....

.....

.....

.....

.....

(b) A simple laminated iron-core transformer takes mains voltage 230 V, 50 Hz into the primary coil. The output voltage from the secondary coil is 5.0 V. The primary coil has 920 turns.

(i) State *Faraday's law*.

.....

..... **[1]**

(ii) Show that the number of turns on the secondary coil is 20.

[2]

(iii) At one particular instant, the output voltage from the transformer is 3.4 V.

Calculate the change in magnetic flux experienced by the secondary coil in a short time interval of 1.2 ms and state its unit.

Assume that the output voltage from the transformer remains constant at 3.4 V over this time interval.

$\Delta\Phi$ = ... unit ..... **[4]**

© OCR 2024

19 The diagram shows part of an X-ray telescope which uses a crystal scintillation device to detect low energy X-rays from the stars.

X-rays hit the crystal and cause it to emit visible light photons. These travel to the photocathode in an evacuated tube. The photocathode uses the light photons to produce electrons.

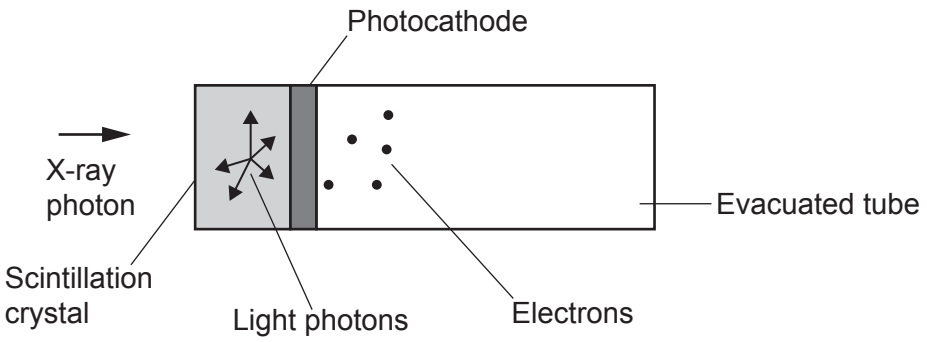

Each X-ray photon detected by the telescope has an energy of 32 keV.

The light photons have a wavelength of 510 nm.

The efficiency of the crystal is 15%.

(a) Show that each X-ray photon produces about 2000 light photons.

[3]

(b) The photocathode has a work function of 2.3 eV.

(i) Explain what is meant by the *work function*.

.....

..... **[1]**

© OCR 2024

(ii) Calculate the maximum kinetic energy of the electrons leaving the photocathode.

maximum kinetic energy = ...J **[2]**

(iii) 12 X-ray photons are detected every minute.

Use your answer to **(a)** to calculate the current I leaving the photocathode. Assume that all the photons of light produce photoelectrons.

I = ... A **[2]**

(iv) State one other assumption you have made to enable you to calculate the current I in **(b)(iii)**.

.....

..... **[1]**

© OCR 2024

20 The diagram below shows the average nuclear binding energy per nucleon for a number of different isotopes.

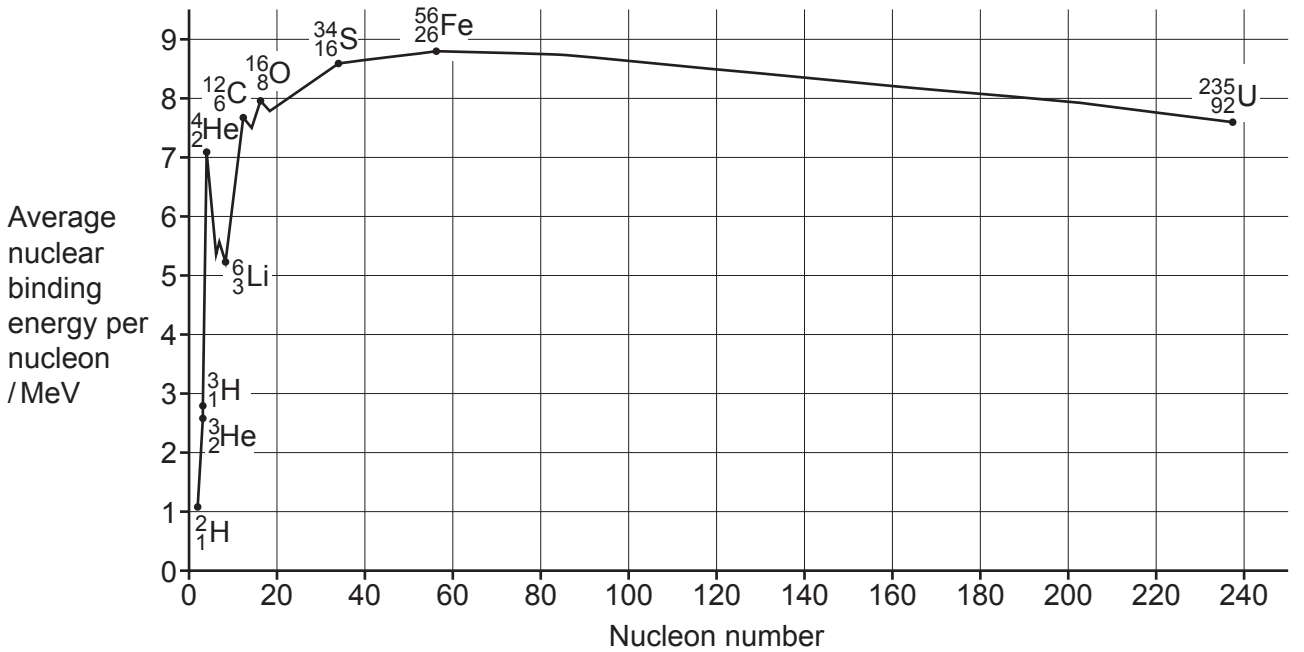

(a) Explain what is meant by *nuclear binding energy* of a nucleus.

.....

..... **[1]**

(b) Suggest why the $^{1}_{1}H$ isotope of hydrogen has **not** been included on the above diagram.

.....

..... **[1]**

(c) The main nuclear fusion reaction in the Sun is between nuclei of deuterium ($^{2}_{1}H$) and tritium ($^{3}_{1}H$). This reaction can be written as shown below.

$$^{2}_{1}H + ^{3}_{1}H \rightarrow ^{4}_{2}He + ^{1}_{0}n$$

(i) Explain why isotopes with low mass numbers, such as hydrogen, are those which undergo nuclear fusion.

.....

.....

..... **[1]**

© OCR 2024

(ii) Use the diagram given at the start of this question to show that, for the reaction of deuterium and tritium, the energy released in each fusion event is approximately 3×10^{-12} J.

[3]

(iii) The Sun's mass deceases by 4.3×10^{9} kg every second. Assume that the mass loss is only due to this reaction.

Calculate the number of fusion events per second occurring in the Sun.

number of fusion events per second = ... s^{-1} **[2]**

(d) In the Sun, deuterium ($^{2}_{1}H$) is produced from fusion of two hydrogen ($^{1}_{1}H$) nuclei, as shown below. There is a particle missing.

$$^{1}_{1}H + ^{1}_{1}H \rightarrow ^{2}_{1}H + ^{0}_{1}\beta^{+} + ...$$

(i) Determine the charge of the missing particle.

..... **[1]**

(ii) The missing particle is a lepton. Name this lepton.

..... **[1]**

(iii) In the fusion reaction above, determine the total number of up quarks at the **start** of the reaction.

..... **[1]**

(e) Tritium ($^{3}_{1}H$) is another isotope of hydrogen which is formed in stars. On the Earth, tritium is a radioactive element which decays by β^{-} emission.

Write down the equation for β^{-} decay in terms of quarks.

[2]

© OCR 2024

21 Technetium-99m ($^{99}_{43}Tc^{m}$) is a metastable radioisotope which can be used as a tracer in medical diagnosis. It is injected into the body and decays by gamma emission into technetium-99 according to the following chemical equation.

$$^{99}_{43}Tc^{m} \rightarrow {}^{99}_{43}Tc + {}^{0}_{0}\gamma$$

(a)
(i) Explain what is meant by a *tracer*.

.....

..... **[1]**

(ii) $^{99}_{43}Tc^{m}$ only emits gamma radiation.

Give **two** advantages of using a tracer which only emits gamma radiation.

1 .....

.....

2 .....

.....
[2]

(b)
(i) A technetium-99m tracer with an activity of 900 MBq is injected into a body. The half-life of technetium-99m is 6.01 hours.

Calculate the number of technetium-99m nuclei initially present in the tracer.

number = ... **[3]**

(ii) Calculate the time in hours taken for the activity of the tracer to have fallen to 3.0% of its initial activity.

time = ... hours **[3]**

© OCR 2024

(c) The daughter nucleus ($^{99}_{43}Tc$) decays by beta emission with a half-life of a little over 200 000 years. Approximately 50% of it is stored in the bones, and 50% is passed out of the body.

Suggest why the presence of this remaining $^{99}_{43}Tc$ in the body causes little additional risk to the patient.

.....

.....

..... **[1]**

(d)* The half-life of a different radioisotope is to be determined using suitable apparatus. Each count represents one decay. The number of counts is measured for one minute every hour over a period of 6 hours. When the data has been collected, a graph of ln(corrected count rate / minute) against time is plotted and shown below.

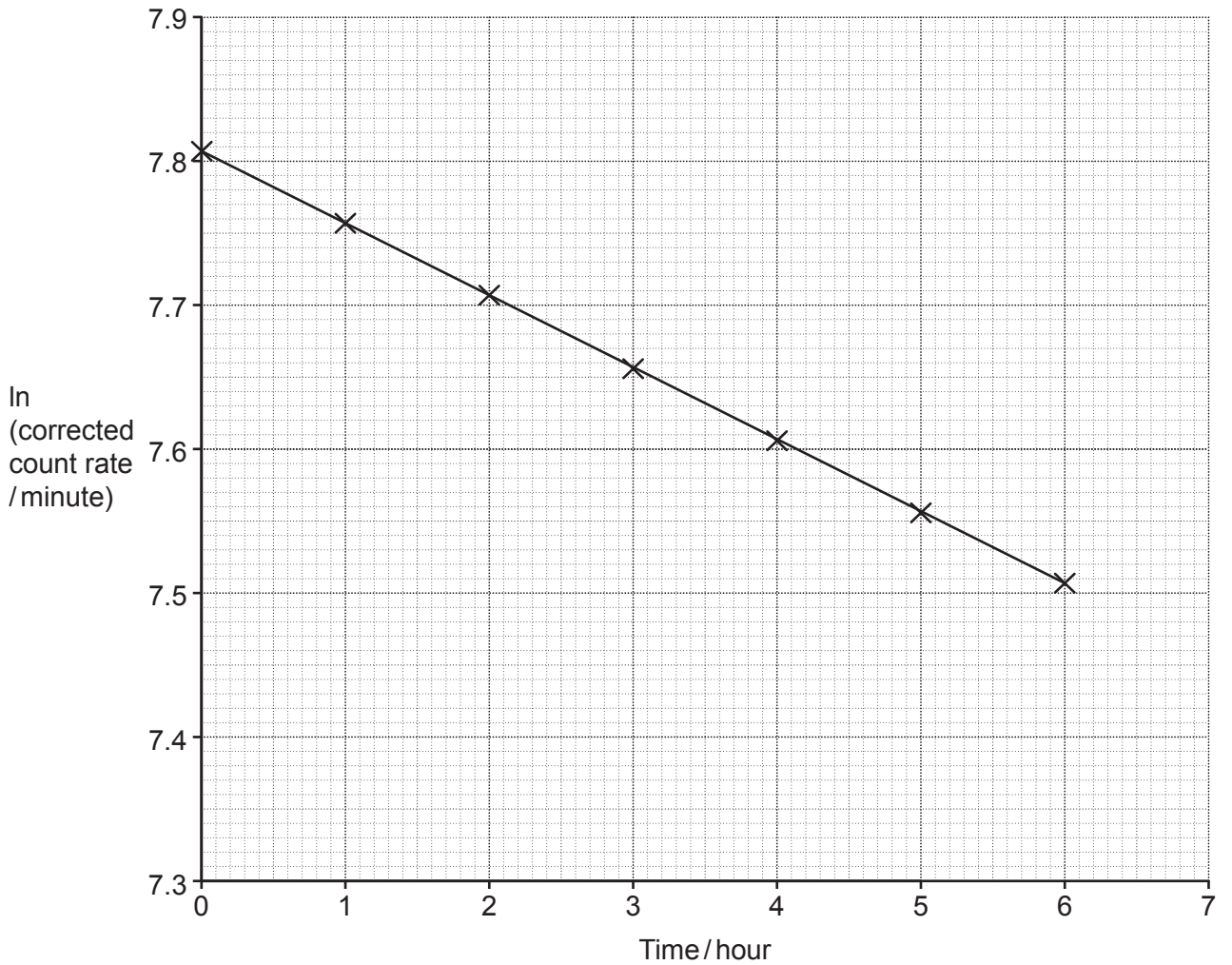

- Describe an appropriate method that could be used to obtain this data, naming any apparatus and safety precautions taken.
- Use the graph given above to determine the half-life of this radioisotope showing clear working. **[6]**

.....

.....

© OCR 2024

.....

.....

.....

.....

.....

.....

.....

.....

.....

.....

.....

Additional space if required

.....

.....

.....

.....

.....

.....

.....

.....

© OCR 2024

BLANK PAGE

PLEASE DO NOT WRITE ON THIS PAGE

© OCR 2024

22 This question is about lightning.

(a) Sheet lightning occurs when there is an electrical discharge between the upper and lower regions of a thunder cloud.
The upper regions are positive and the lower regions are negative.

The thunder cloud can be modelled as an ideal parallel plate capacitor with circular horizontal plates.

The data for the capacitor comes from the cloud.

Diameter of cloud	24 km
Distance between upper and lower regions	3.2 km
Electric field strength between the regions	$4.0 \times 10^5\,\mathrm{V\,m^{-1}}$

(i) The diagram shows the plates of the model capacitor superimposed on the cloud.

Draw on the diagram to show the electric field lines between capacitor plates. **[2]**

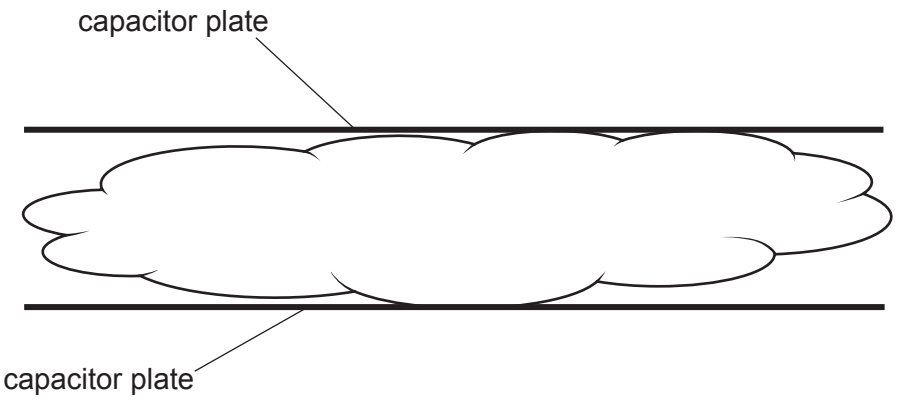

(ii) Suggest why the actual electric field lines of the cloud would differ from what you have drawn.

.....

..... **[1]**

(iii) Show that the potential difference (p.d.) V between the plates is about 1×10^9 V.

[1]

© OCR 2024

(iv) Calculate the capacitance C of the model capacitor.

Assume the permittivity of the material of the cloud is the same as the permittivity of free space.

C = ... F **[2]**

(v) Calculate the magnitude of the charge Q on one of the plates of the model capacitor.

Q = ... C **[2]**

(b) Fork lightning is an electrical discharge that occurs between the bottom of the cloud and the surface of the Earth.

Another cloud has a charge of 155 C and is at a height of 2.0 km.

The surface of the Earth has an electrical potential V of 0 V.

(i) Assume the cloud acts as a **point** charge.

Calculate the magnitude of the electrical potential V between the cloud and the surface of the Earth.

V = ... V **[2]**

(ii) A fork lightning strike has a duration of 25 ms. The cloud discharges at a constant rate. The cloud is uncharged after the strike.

Calculate the number of electrons reaching the ground in 1.0 ms.

number of electrons in 1.0 ms = ... **[3]**

END OF QUESTION PAPER

© OCR 2024

EXTRA ANSWER SPACE

If you need extra space use these lined pages. You must write the question numbers clearly in the margin.

© OCR 2024

© OCR 2024

© OCR 2024

© OCR 2024

OCR
Oxford Cambridge and RSA

Copyright Information

OCR is committed to seeking permission to reproduce all third-party content that it uses in its assessment materials. OCR has attempted to identify and contact all copyright holders whose work is used in this paper. To avoid the issue of disclosure of answer-related information to candidates, all copyright acknowledgements are reproduced in the OCR Copyright Acknowledgements Booklet. This is produced for each series of examinations and is freely available to download from our public website (www.ocr.org.uk) after the live examination series.

If OCR has unwittingly failed to correctly acknowledge or clear any third-party content in this assessment material, OCR will be happy to correct its mistake at the earliest possible opportunity.

For queries or further information please contact The OCR Copyright Team, The Triangle Building, Shaftesbury Road, Cambridge CB2 8EA.

OCR is part of Cambridge University Press & Assessment, which is itself a department of the University of Cambridge.

© OCR 2024