OCR | A-LEVEL PHYSICS | H556/03

Unified physics

June 2025 exam series

QUESTION PAPER

Provided for free student revision by Smart Edge International Ltd.
Original material copyright OCR and its licensors. SmartEdge is not affiliated with or endorsed by OCR. For personal study only.
Not for resale or redistribution.

Oxford Cambridge and RSA

Tuesday 17 June 2025 – Morning

A Level Physics A

H556/03 Unified physics

Time allowed: 1 hour 30 minutes

You must have:
- the Data, Formulae and Relationships Booklet

You can use:
- a scientific or graphical calculator
- a ruler (cm/mm)

Please write clearly in black ink. **Do not write in the barcodes.**

Centre number | | | | | | Candidate number | | | | |

First name(s) _____

Last name _____

INSTRUCTIONS
- Use black ink. You can use an HB pencil, but only for graphs and diagrams.
- Write your answer to each question in the space provided. If you need extra space use the lined page at the end of this booklet. The question numbers must be clearly shown.
- Answer **all** the questions.
- Where appropriate, your answers should be supported with working. Marks might be given for using a correct method, even if your answer is wrong.

INFORMATION
- The total mark for this paper is **70**.
- The marks for each question are shown in brackets **[ ]**.
- Quality of extended response will be assessed in questions marked with an asterisk (*).
- This document has **20** pages.

ADVICE
- Read each question carefully before you start your answer.

© OCR 2025 [601/4743/X]
DC (ST/JG) 360406/2
OCR is an exempt Charity

Turn over

1 The Earth's aurora is an atmospheric effect visible in the polar regions.

Electrons in the upper atmosphere initially move vertically downwards along one of the Earth's **magnetic** field lines. They are accelerated by an **electric** field.

These electrons collide with oxygen atoms causing atomic electrons to be excited to higher energy levels. The atomic electrons then return to lower energy levels, releasing photons of green light, red light and ultraviolet.

The accelerated electrons then travel horizontally through the atmosphere, before travelling vertically along a different magnetic field line, and then completing the circuit by travelling horizontally back to their starting point.

The situation is shown in **Fig. 1.1**.

Fig. 1.1

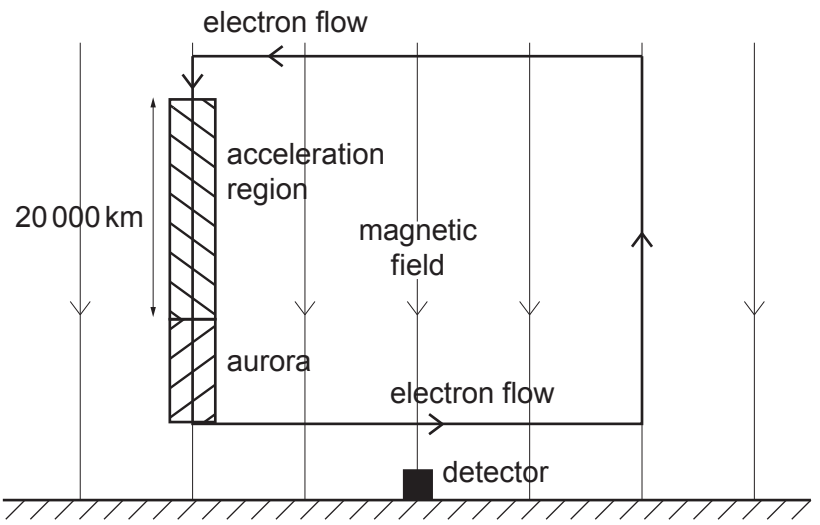

not to scale

(a) The accelerated electrons are accelerated by electric fields parallel to the magnetic field lines.

The length of the acceleration region is 20 000 km and the electric field value is 0.2 mV / m. The electric field can be assumed to be uniform.

(i) Calculate the kinetic energy gained by the electrons as they pass through the electric field, in joules.

kinetic energy = ...J **[3]**

© OCR 2025

(ii) State and explain the direction of the electric field required to accelerate the electrons **downwards**.

.....

.....

.....

..... **[2]**

(b) A simplified energy level diagram for atomic oxygen is shown below.

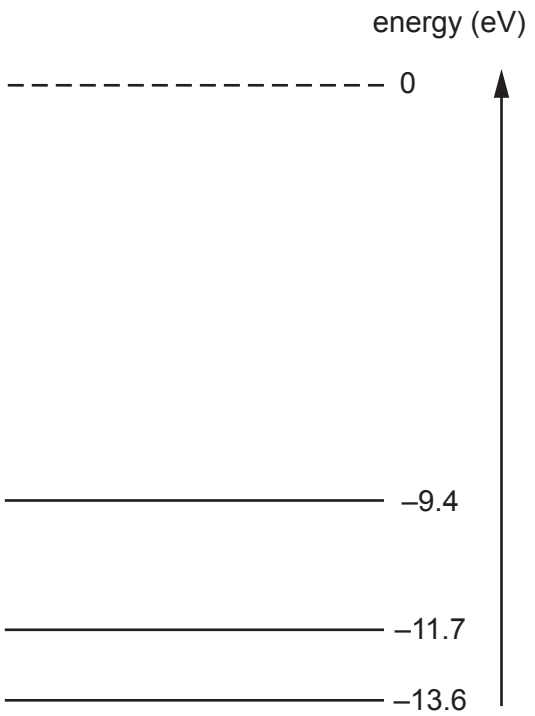

not to scale

Determine the wavelength of the green light emitted.

Fully justify your answer.

wavelength = ... m **[4]**

© OCR 2025

Turn over

(c) The horizontal current closest to the Earth produces a magnetic field which can be detected at ground level.

With reference to **Fig. 1.1**, state and explain the direction of this magnetic field.

.....

.....

.....

..... **[2]**

(d) Suggest **two** ways that the horizontal current may affect the atmosphere.

1 .....

.....

2 .....

.....
[2]

© OCR 2025

BLANK PAGE

DO NOT WRITE ON THIS PAGE

© OCR 2025

2 A student carries out an experiment to measure the frequency, *f*, of the mains electricity supply, using the apparatus shown in the diagram.

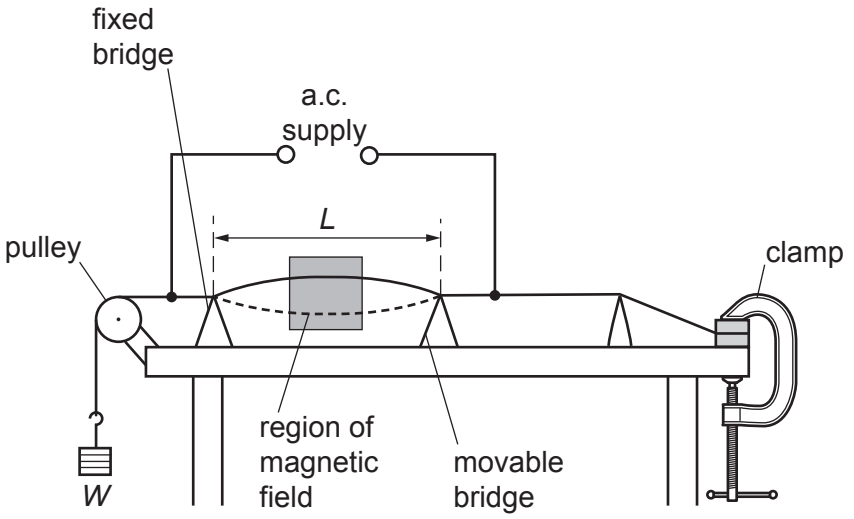

The wire passes between the poles of a magnet. It is held in tension by the weight *W* of the mass hanger. The fixed bridge and the movable bridge are separated by distance *L*.

Mains frequency current is passed through the wire. The student adjusts the movable bridge until the wire vibrates at its fundamental frequency. The weight *W* and the length *L* are recorded. This is repeated for several different weights.

(a) Explain how a stationary wave is formed on the wire.

.....

.....

.....

..... **[2]**

(b) It can be shown that the fundamental frequency f_0 of a wire of length *L* under tension *W* is given by the equation

$$f_0 = \frac{1}{2L}\sqrt{\frac{W}{\mu}}$$

where μ is the mass per unit length of the wire, and has a value of $8.0 \times 10^{-4}\,\text{kg}\,\text{m}^{-1} \pm 2\%$.

(i) Suggest why the magnetic flux density, *B*, of the magnet does not appear in this equation.

.....

..... **[1]**

© OCR 2025

(ii) Suggest a method to determine the mass per unit length, μ, of the wire.

.....

.....

.....

..... **[2]**

© OCR 2025

(c) The graph shows the results of the experiment.

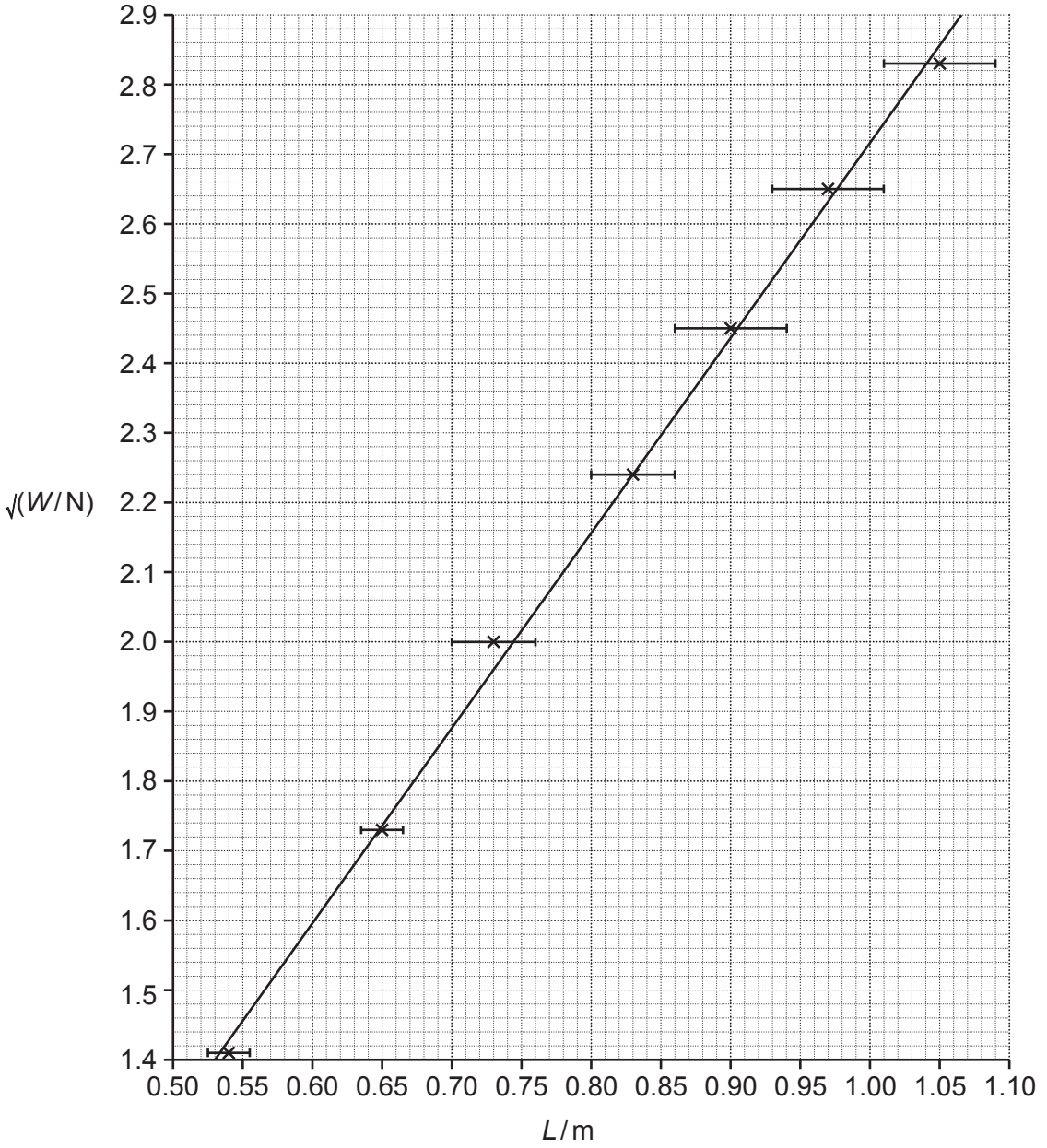

© OCR 2025

The student draws a best fit line on the graph. The gradient of the best fit line is $2.81\,N^{1/2}\,m^{-1}$.

(i) Draw a worst acceptable line on the graph. **[1]**

(ii) Use your worst acceptable line to calculate the percentage uncertainty in the gradient of the best fit line.

gradient = 2.81 ± ..... $N^{1/2}\,m^{-1}$ % **[3]**

(iii) Calculate a value for the mains frequency, *f*, including a percentage uncertainty.

f = ... Hz ± .....% **[3]**

(iv) Evaluate the accuracy of your value for *f*, given that the true value is 50.0 Hz.

.....

.....

.....

..... **[2]**

© OCR 2025

3 This question is about comparing two methods for storing energy.

(a) A proposed method for storing energy uses trucks powered by electric motors.

The trucks carry sand up a mountain, storing surplus energy as gravitational potential energy.

When the energy needs to be released, they carry the sand back down the mountain, converting the gravitational potential energy into chemical energy stored in a battery.

Explain how an electrical generator in the truck could use **electromagnetic induction** to convert gravitational potential energy into chemical energy stored in a battery.

.....

.....

.....

.....

.....

..... **[3]**

(b) A second proposed method for storing energy uses a tank of wax.

The wax is heated using an electrical heater, storing surplus energy as internal energy of the wax. The wax increases in temperature and melts as it is heated.

When the energy needs to be released, the wax is allowed to cool, converting the internal energy of the wax into thermal energy.

Explain, in terms of the particles in the wax, how energy is stored when it is heated.

.....

.....

.....

.....

.....

..... **[3]**

(c)* A gravitational potential energy storage system, as described in **(a)**, is proposed as follows:

- height of mountain = 1 km
- overall efficiency = 70 %

A thermal energy storage system, as described in **(b)**, is proposed as follows:

- lower operating temperature = 18 °C
- melting point of wax = 51 °C
- upper operating temperature = 70 °C
- specific heat capacity of solid wax = 2.6 kJ kg^{-1} K^{-1}

© OCR 2025

- specific heat capacity of liquid wax = 3.0 kJ kg^{-1} K^{-1}
- specific latent heat of fusion of wax = 160 kJ kg^{-1}
- overall efficiency = 95 %

Estimate the energy that can be stored by each system using 1 kg of sand or wax.

Discuss which system would be more appropriate for storing surplus electrical energy. Your answer should include an estimate of the energy that can be stored in each system using 1 kg of sand or wax.

Ignore any financial factors.

.....

.....

.....

.....

.....

.....

.....

.....

.....

.....

.....

.....

Additional answer space if required

.....

.....

.....

.....

.....

.....

..... **[6]**

© OCR 2025

4 An electroscope is an instrument used to measure electric charge.

The diagram shows one type of electroscope.

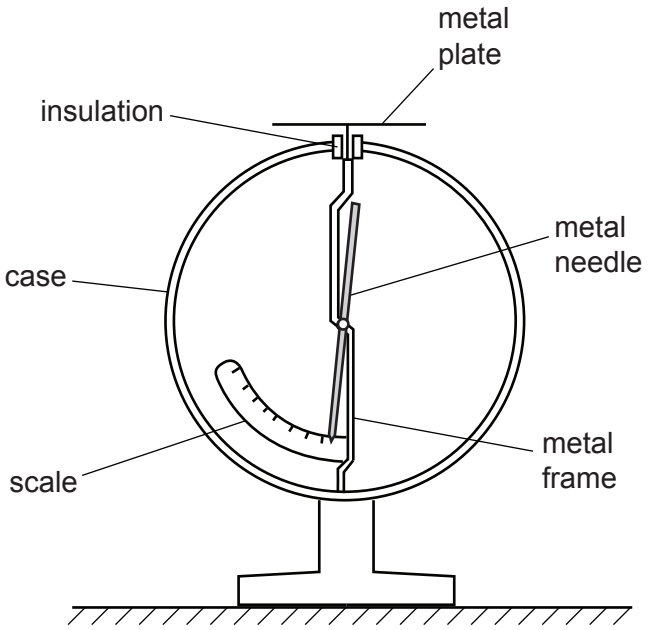

The diagram below shows the needle of the electroscope when it is negatively charged. The centre of mass, **X**, of the needle has been marked on the diagram.

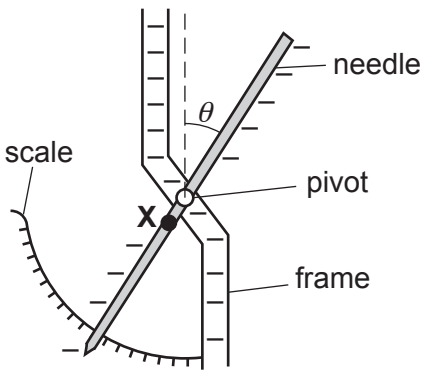

(a) Suggest why the centre of mass of the needle is a **short** distance **below** the pivot.

.....

.....

.....

..... **[2]**

© OCR 2025

(b) A student charges the electroscope by connecting the metal plate to the negative terminal of a high voltage power supply.

They record the deflection angle of the needle for a range of values of the voltage measured using a voltmeter.

Their results are shown in the graph below.

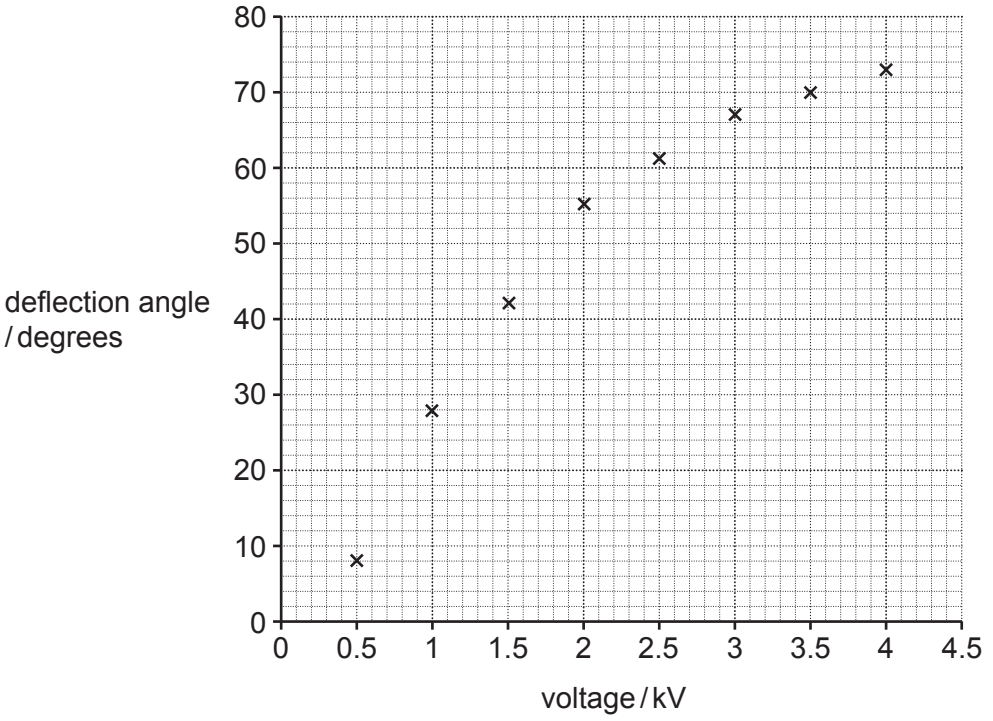

(i) The student concludes that the voltmeter has a zero error of 300 V.

Explain their reasoning.

.....

..... **[1]**

(ii) The capacitance of the electroscope is 20 pF.

Estimate the number of electrons stored on the electroscope when the deflection angle is 45°.

number of electrons = ... **[4]**

© OCR 2025

5 To control insect populations, sterilised male insects can be released into the wild.

They mate with females, who then produce no offspring, reducing the future population.

Sterilisation can be carried out using ionising radiation. The insects are placed in a canister about 10 cm across and then deliberately exposed to a known dose of ionising radiation.

(a) Suggest why exposing an insect to ionising radiation may cause it to become infertile.

.....

..... **[1]**

(b) Both gamma rays and X-rays can be used to sterilise the insects.

(i) Suggest why alpha radiation is **not** suitable for irradiating large numbers of insects.

.....

.....

.....

..... **[2]**

© OCR 2025

(ii)* The sterilisation process may need to be carried out in laboratories that do not otherwise make use of ionising radiation.

Discuss the advantages and disadvantages of using gamma rays rather than X-rays for this purpose, including:

- descriptions of how gamma rays and X-rays are produced
- a comparison of any practical considerations relating to their use, including safety.

You may ignore any financial considerations.

.....

.....

.....

.....

.....

.....

.....

.....

.....

.....

.....

.....

.....

.....

Additional answer space if required

.....

.....

.....

.....

.....

.....

..... **[6]**

© OCR 2025

6 Gravitational waves are disturbances in space-time that are produced by violent astrophysical events.

(a) They are detected by measuring the change in length of a detector as the wave passes through. The change in length is reported as a strain.

The graph shows the variation in time of the strain due to the gravitational waves emitted by the collision of two black holes.

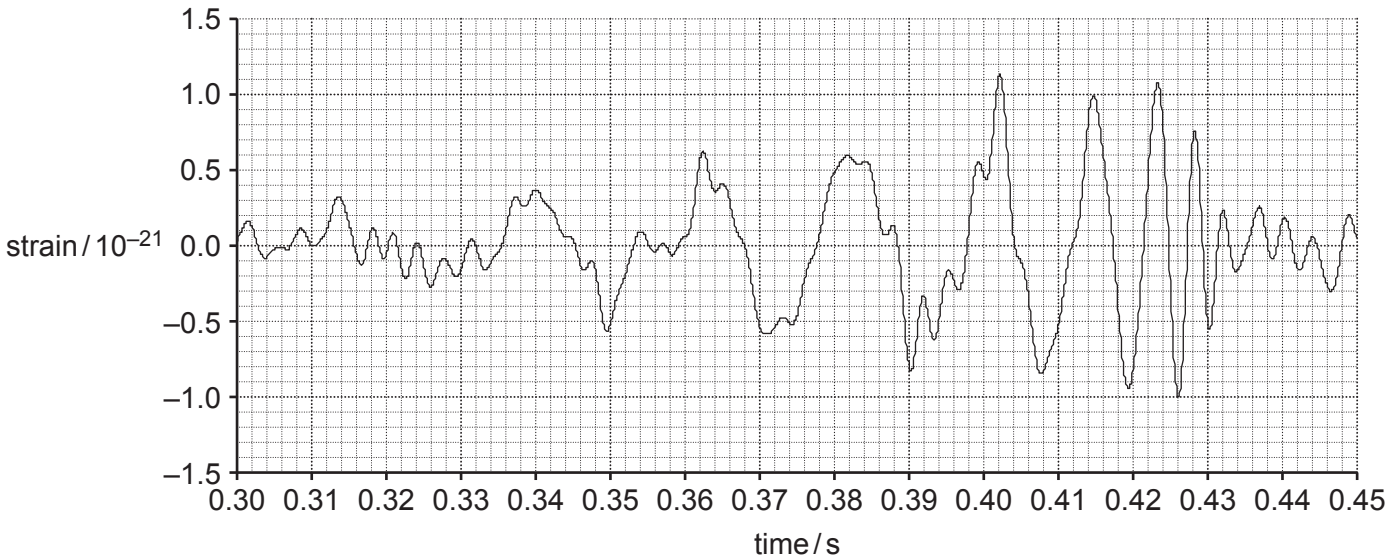

(i) Define **strain**.

.....

..... **[1]**

(ii) The maximum strain shown on the graph is approximately 10^{-21}.

Calculate the force that would produce the same strain in a copper wire of diameter 2 mm.

Young modulus of copper = 130 GPa

force = ... N **[3]**

© OCR 2025

(iii) By considering the answer to **(ii)**, suggest why it is very difficult to detect the strain caused by gravitational waves.

.....

.....

.....

..... **[2]**

(b) In this part of the question you will use Newtonian physics to estimate the power output of the black hole collision.

The diagram shows two identical black holes, each of mass *M*, orbiting each other with period T.

Prior to colliding, the black holes move at speed *V* in identical circular orbits of diameter *D* about the central point C.

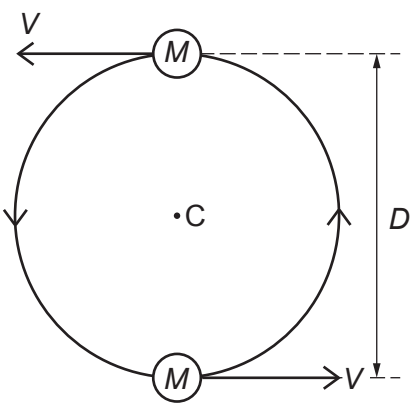

(i) Write down an expression for the gravitational force, *F*, acting between the black holes in terms of *M*, *D* and the universal gravitational constant, *G*.

F = ... **[1]**

© OCR 2025

Turn over

(ii) The total orbital energy, E, of the black holes is the sum of their kinetic energy and gravitational potential energy. Show that E is given by the expression:

$E = k\,(\pi^2 G^2 M^5)^{1/3}\,(1/T^{2/3})$

where k is a numerical constant.

.....

.....

.....

.....

.....

..... **[3]**

(iii) The graph below shows detail from the graph in **(a)**.

The black holes spiral towards one another before colliding. As they do so their orbit period decreases.

The orbit period is equal to the period of the gravitational waves.

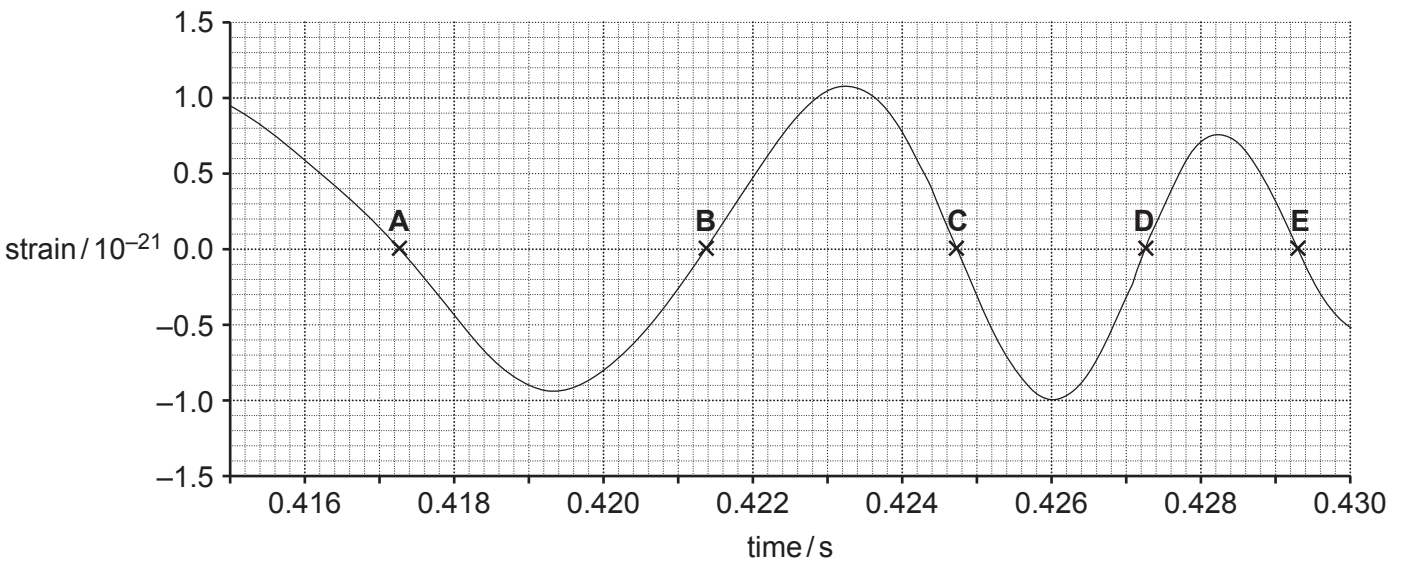

© OCR 2025

By considering the time periods **AC** and **CE**, estimate the orbital energy lost by the black holes between these two orbits.

Use k $(\pi^2 G^2 M^5)^{1/3} = -2.04 \times 10^{46}$

energy lost = ... J **[3]**

(iv) By considering times **B** and **D**, use your answer to **(iii)** to estimate the power radiated as gravitational waves in this time interval.

power = ...W **[2]**

END OF QUESTION PAPER

© OCR 2025

EXTRA ANSWER SPACE

If you need extra space use this lined page. You must write the question numbers clearly in the margin.

OCR
Oxford Cambridge and RSA

Copyright Information

OCR is committed to seeking permission to reproduce all third-party content that it uses in its assessment materials. OCR has attempted to identify and contact all copyright holders whose work is used in this paper. To avoid the issue of disclosure of answer-related information to candidates, all copyright acknowledgements are reproduced in the OCR Copyright Acknowledgements Booklet. This is produced for each series of examinations and is freely available to download from our public website (www.ocr.org.uk) after the live examination series.

If OCR has unwittingly failed to correctly acknowledge or clear any third-party content in this assessment material, OCR will be happy to correct its mistake at the earliest possible opportunity.

For queries or further information please contact The OCR Copyright Team, The Triangle Building, Shaftesbury Road, Cambridge CB2 8EA.

OCR is part of Cambridge University Press & Assessment, which is itself a department of the University of Cambridge.

© OCR 2025